OPERATING MANUAL

MODEL NO. 960 BUNGALOW

GAS FIRED HOT AIR BLOWER

TRACK SWITCH SNOW MELTER

WITH STEEL TIE DUCT

MANUFACTURED

BY

RAILWAY EQUIPMENT COMPANY
16400 MEDINA ROAD
PLYMOUTH, MINNESOTA 55447
TEL. 763-972-2200
FAX. 763-972-2900
E-Mail:
Support: Techsupport@rwy.com
Sales: Order@rwy.com

P/N 9600-0103
REV B
07/11

CAUTION

GENERAL HAZARD WARNING

FAILURE TO COMPLY WITH THE PRECAUTIONS AND INSTRUCTIONS PROVIDED WITH THIS HEATER, CAN RESULT IN DEATH, SERIOUS INJURY AND PROPERTY LOSS OR DAMAGE FROM HAZARDS OF FIRE, EXPLOSION, BURN, ASPHYXIATION, CARBON MONOXIDE POISONING, AND/OR ELECTRICAL SHOCK.

ONLY PERSONS WHO CAN UNDERSTAND AND FOLLOW THESE INSTRUCTIONS SHOULD USE OR SERVICE THIS HEATER.

IF YOU NEED ASSISTANCE OR HEATER INFORMATION, SUCH AS INSTRUCTION MANUALS, LABELS, ETC., CONTACT THE MANUFACTURER.

WARNING

WARNING: FIRE, BURN, INHALATION, AND EXPLOSION HAZARD.

KEEP SOLID COMBUSTIBLES, SUCH AS BUILDING MATERIALS, PAPER OR CARDBOARD, A SAFE DISTANCE AWAY FROM THE HEATER AS RECOMMENDED BY THE INSTRUCTIONS. NEVER USE THE HEATER IN SPACES WHICH DO OR MAY CONTAIN VOLATILE OR AIRBORNE COMBUSTIBLES, OR PRODUCTS SUCH AS GASOLINE, SOLVENTS, PAINT THINNER, DUST PARTICLES OR UNKNOWN CHEMICALS.

WARNING

NOT FOR HOME OR RECREATIONAL VEHICLE USE
The heater is designed and approved for use as a construction heater under ANSI Z83.7

We cannot anticipate every use which may be made of our heaters.
CHECK WITH LOCAL FIRE SAFETY AUTHORITY IF YOU HAVE QUESTIONS ABOUT APPLICATIONS.

Other standards govern the use of fuel gases and heat producing products in specific applications. Your local authority can advise you about these.

PLEASE READ THIS INSTRUCTION MANUAL ENTIRELY BEFORE HANDLING THIS MATERIAL OR ATTEMPTING TO INSTALL, OPERATE OR SERVICE THIS HOT AIR BLOWER SYSTEM.

PLEASE READ THE WARNINGS AND CAUTIONS LISTED BELOW.

CAUTION

SHEET METAL EDGES MAY BE VERY SHARP AND CAN CAUSE SEVERE CUTS OR LACERATIONS. PROTECTIVE GLOVES AND CLOTHING SHOULD BE WORN. USE CAUTION WHEN HANDLING ALL SHEET METAL COMPONENTS.

CAUTION

THIS HOT AIR BLOWER TRACK SWITCH SNOWMELTER SYSTEM CAN BE OPERATED REMOTELY OR BY A SNOW DETECTOR SYSTEM. THEREFORE, OPERATION MAY BEGIN UNEXPECTEDLY. USE CAUTION WHEN IN THE AREA.

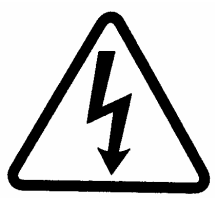

CAUTION

SYSTEM OPERATES WITH VARIOUS VOLTAGE LEVELS UP TO 240VAC. CONTACT WITH ELECTRICITY CAN BE HAZARDOUS OR LETHAL. MAKE SURE THAT THE MAIN CIRCUIT BREAKER IS TURNED OFF BEFORE ATTEMPTING TO SERVICE THIS SYSTEM. EVEN WITH CIRCUIT BREAKER OFF LINE VOLTAGE IS PRESENT AT THE TOP CIRCUIT BREAKER CONNECTIONS.

CAUTION

THIS SYSTEM CONTAINS A HIGH SPEED AIR FAN WHICH ROTATES AT UP TO 3600RPM AND CREATES FORCEFUL SUCTION WHEN OPERATING. DO NOT OPERATE THE BLOWER SYSTEM IF ANY OF THE DUCTWORK COMPONENTS HAVE BEEN REMOVED.

CAUTION

THIS SYSTEM OPERATES WITH NATURAL GAS OR PROPANE. BOTH ARE GASES WHICH ARE FLAMMABLE AND EXPLOSIVE. USE EXTREME CAUTION WHEN WORKING IN THE AREA. AVOID ANY OPEN FLAME, SPARKS OR OTHER SOURCE OF IGNITION.

CAUTION

THE OUTLET AIR TEMPERATURE FROM THIS GAS SNOW MELTER SYSTEM SHOULD NOT EXCEED 375°F FROM ANY NOZZLE OR DUCT. **DO NOT OPERATE THIS BLOWER SYSTEM IF THE OUTLET TEMPERATURE EXCEEDS 375°F.** AN ACCURATE THERMOMETER SHOULD BE USED TO REGULARLY CHECK THE OUTLET AIR TEMPERATURE. IF THE OUTLET TEMPERATURE EXCEEDS 375°F, CHECK TO MAKE SURE THAT THE FLOW OF AIR IS NOT RESTRICTED AT ANY POINT, THAT THE BLOWER/MOTOR ARE OPERATING PROPERLY, THAT THE CORRECT ORIFICE IS USED FOR THE TYPE OF FUEL USED, AND THAT THE REGULATOR(S) ARE PROPERLY ADJUSTED FOR THE FUEL BEING USED. CONSULT RAILWAY EQUIPMENT COMPANY IF YOU ARE UNABLE TO OPERATE THIS GAS SNOW MELTER SYSTEM BELOW 375°F.

A HIGH TEMPERATURE LIMIT SYSTEM HAS BEEN INCORPORATED INTO ALL RAILWAY EQUIPMENT COMPANY GAS SNOW MELTER SYSTEMS BEGINNING IN 1999. RAILWAY EQUIPMENT COMPANY ALSO HAS A HIGH TEMPERATURE LIMIT MODIFICATION KIT THAT CAN BE ADDED TO GAS SNOW MELTER SYSTEMS MANUFACTURED PRIOR TO 1999. IT IS RECOMMENDED THAT THIS HIGH TEMPERATURE LIMIT SYSTEM BE INSTALLED AND USED. CONSULT RAILWAY EQUIPMENT TO ORDER THE HIGH TEMPERATURE MODIFICATION KIT, OR IF YOU NEED ASSISTANCE REGARDING THE HIGH TEMPERATURE LIMIT SYSTEM.

THIS SNOW MELTER SYSTEM HAS BEEN DESIGNED TO PROVIDE DEPENDABLE EFFECTIVE OPERATION IN ALL WEATHER CONDITIONS **WITHOUT SWITCH COVERS**. SWITCH COVERS MAY CAUSE HIGHER AIR TEMPERATURES. IF SWITCH COVERS ARE USED, **YOU** MUST DETERMINE A SAFE OPERATING AIR TEMPERATURE AND ADJUST BURNER PARAMETERS ACCORDINGLY. ADJUSTMENT OF BURNER PARAMETERS MAY NEGATIVELY AFFECT BURNER PERFORMANCE AND COMBUSTION CHARACTERISTICS TO THE EXTENT THAT THE BURNER MAY BE UNABLE TO MAINTAIN COMBUSTION. CONSULT RAILWAY EQUIPMENT COMPANY REGARDING BURNER OPERATING PARAMETERS.

TWO (2) COMPLETE INSTRUCTION MANUALS HAVE BEEN INCLUDED WITH THIS SNOW MELTER SYSTEM. PLEASE KEEP ONE OF THE MANUALS WITH THE SYSTEM AFTER INSTALLATION. ANYONE OPERATING OR SERVICING THIS SNOW MELTER SYSTEM SHOULD READ THE MANUAL ENTIRELY BEFORE PROCEEDING.

IF YOU HAVE ANY QUESTIONS CONCERNING THE MANUFACTURE, DESIGN, FUNCTION, INSTALLATION, OPERATION OR MAINTENANCE, CONTACT RAILWAY EQUIPMENT COMPANY BEFORE PROCEEDING.

TABLE OF CONTENTS

I. GENERAL INFORMATION

A. MODEL NUMBER DESCRIPTION

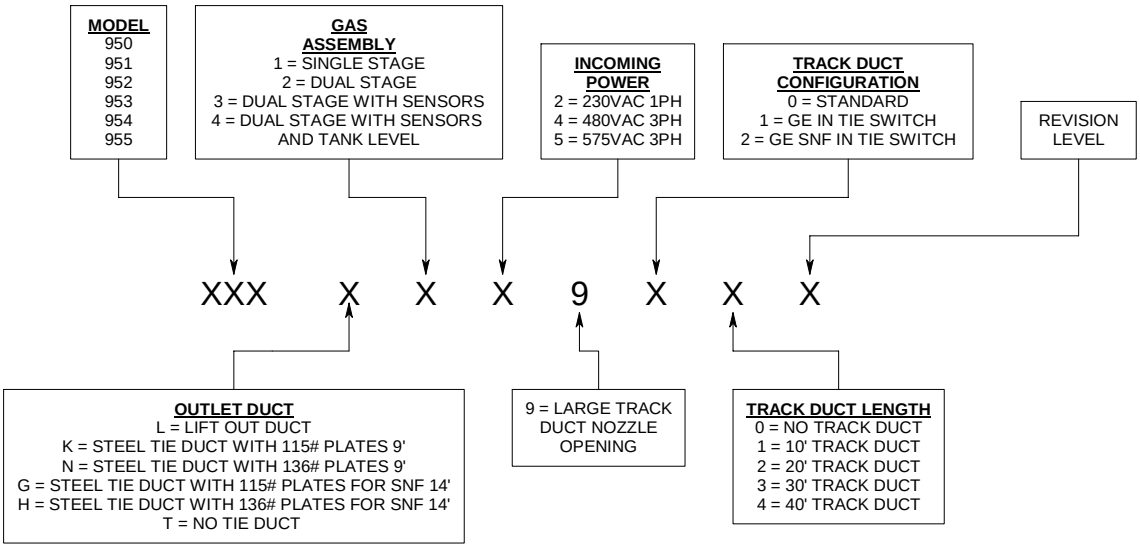

B. STANDARD FEATURES OF 960 SERIES TRACK SWITCH HOT AIR BLOWER

1. GHAB complies with AREMA 12.6.10.
2. Gas fired operation, allows for both propane and natural gas (convertible in the field)
3. Two stage operation (400,000 / 200,000 BTU) that allows savings on fuel costs.
4. 2 H.P. direct drive motor, totally enclosed fan cooled, 230VAC 60Hz, single phase.
5. High efficiency, quiet operation , 2000 CFM blower.
6. Remote operation via contact closure (low voltage, low current) with timed shut off.
7. Built-in snow detector system (requires Snow Detector assembly option).
8. Auto-Off-Force switch.
9. High temperature limit thermostat/shut off.
10. Adjustable air temperature control.
11. Adjustable rail temperature control.
12. Reply indication via GHAB contact closure.
13. Fail indication via GHAB contact closure.
14. Main circuit breaker.
15. Audible tone before blower startup
16. Weathertight gasketed control enclosure

17. Status indicating lights for all control functions
18. Start delay timer for sequential startup
19. Run timer for timed operation
20. Selectable "Transparent" snow detector operation
21. Snow detect timer
22. All ductwork and nozzles are thermally and electrically isolated from tracks
23. Quick-release track duct
24. Blower motor starter with overload protection
25. Remote auxiliary gas valve (115vac) supplied connection
26. Gas line accessories:
    Manual gas valve
    Gas line strainer
    Low pressure regulator
    Flexible gas line connection pipe
27. Elevated air intake
28. Adjustable delay for start up (10 Sec. -5 Min.)
29. Complete flame safeguard control:
    Pre-ignition air purge.
    Air flow proving switch
    Direct spark ignition
    Flame proving sensor
    Post shut off air purge 4 Min.
    Automatic shut off on loss of flame or air flow
    Leaky gas valve
    Automatic retry on flame loss
    Automatic reset on flame safeguard control
    All flame safeguard controls CSA listed.
30. All components mounted and wired within main unit – no external wiring required except for remote control, indications and optional snow detectors
31. Galvanized case constructed of 14-gauge steel, high temperature baked enamel finish.
32. Convenient panel access to high efficiency burner, flame sensor and spark igniter.
33. Galvanized steel adjustable mounting foundations.
34. Standard ductwork: 1.5’ flame duct with 2.5’ straight insulated flexible duct and heavy duty insulated offset duct connects to main tie duct electrically insulated between rails, 24 inch (minimum) switch point nozzles.

The following items are recommended for use with propane gas service:

Tank "pigtail" with POL/POL fittings (P/N 45038-12” or 60127-36”)

High pressure regulator (P/N 45103)

Gas line strainer (P/N 45040)

Remote solenoid valve (P/N 45036)

OR

Complete Propane Package (P/N 9458-0100)

II. COMPONENT DESCRIPTION

A. MAIN HOT AIR BLOWER (HAB) UNIT

1. **MAIN CIRCUIT BREAKER:** Provides main over-current protection and manual on-off control of electrical power

2. **MOTOR CONTACTOR:** Provides automatic blower motor control, with high current contacts

3. **MOTOR OVERLOAD RELAY:** Protects the blower motor from an over-current condition

4. **CONTROL MODULE:** Provides complete control of operation. See separate description and details, section IV

5. **CONTROL TRANSFORMER:** Provides control power for the control module and other control components. The multi-tapped secondary provides, 36VAC CT and 17VAC CT. The primary has 115VAC input plus a 230VAC step-up winding and 12.6 VAC CT windings

6. **IGNITION TRANSFORMER:** Provides 10000VAC to the spark igniter during the ignition sequence

7. **AIRFLOW SWITCH:** Located in the flame duct, the sail switch indicates proper airflow before and during burner operation. The differential setting is determined by elevation.

8. **BURNER:** Contains the actual flame. Also holds the spark igniter and the flame-sensing rod.

9. **PROPANE/NATURAL GAS ORIFICE PLATE:** Controls the rate of flow of gas to the burner.

10. **SPARK IGNITER:** The spark plug type igniter provides spark for the burner. The spark igniter is momentary - sparks only until the flame has been established.

11. **FLAME DETECTION ROD:** The flame detection rod monitors the flame at the burner nozzle using the rectification principle. This provides a low-level signal to the control module if a proper flame exists.

12. **AIR TEMPERATURE SENSOR:** This is an analog type sensing circuit to monitor the ambient air temperature.

13. **RAIL TEMPERATURE SENSOR:** This is an analog type sensing circuit to monitor the actual rail temperature.

14. **GAS VALVE:** This is an electric solenoid valve which controls the flow of gas for burner operation. It is controlled directly from the control module.

15. **BLOWER MOTOR:** The 2HP 3450RPM motor is totally enclosed and fan cooled.

16. **BLOWER:** The high efficiency blower wheel provides up to 2000CFM airflow. It is dynamically balanced for smooth and quiet operation.

17. **BUZZER:** The buzzer will sound a 10-second tone immediately before the motor contactor is energized.

B. STANDARD DUCTWORK

1. **HEAT DUCT:** The first section of ductwork attached to the main HAB unit. This duct contains the burner, air flow switch, spark igniter and the duct pressure sensor

2. **FLEX DUCT:** Connects the heat duct to the offset duct. It is a section of flexible duct, 30” long, enclosed in an insulated sheet metal wrapper.

3. **HEAVY DUTY OFFSET DUCT:** Connects the flex duct to the tie outlet duct. This duct provides an 8” offset and encloses the air mixer.

4. **TIE OUTLET DUCT:** The outlet duct extends under the rails in place of a tie and directs the airflow to the point nozzles and track ducts. The rail attaches to the duct using tie plates and E clips. The tie plates are electrically insulated from the rail using an insulating kit. There are six openings in the top for point nozzles and track duct

nozzles. Refer to drawing 9278-4804 and 950N32903 for the duct layout.

5. **TRACK DUCTS:** These ducts rest on brackets on the ties and the outlet duct. They are installed over the track duct nozzles. The track ducts consist of a 5' point, a 5' mid, and 10' sections to complete the desired length.

6. **TRACK DUCT NOZZLE:** Attaches to the inner two rectangular openings on the top of the outlet duct. Directs airflow down the length of the switch through the track ducts.

7. **TRACK DUCT NOZZLE ISOLATING KIT:** This is an electrically insulating gasket with insulating washers and hardware to provide isolation between the nozzles and the outlet duct. Refer to drawing 9278-0027 for proper installation.

8. **TRACK DUCT SUPPORT BRACKET:** These brackets are used to secure the track duct in position. Refer to drawing 92774.

9. **SWITCH POINT NOZZLE:** These nozzles direct heated air down the switch point. They are mounted on the outlet duct. They can be adjusted for proper airflow direction. Nozzles may be shortened by up to 10" for proper fit.

10. **POINT NOZZLE ISOLATING KIT:** This is an electrically insulating gasket with insulating washers and hardware to provide isolation between the nozzles and the outlet duct. Refer to drawing 9278-0021 for proper installation.

C. OPTIONAL DUCTWORK

1. **EXTENSION DUCTS:** Extension ducts of various lengths are available to meet specific requirements. These are insulated and enclosed in a metal wrapper. Make sure the duct is mounted in the correct orientation, as there is an access opening underneath the insulating wrapper cover. If additional duct extensions are required, this assembly can be added between the outlet duct and the offset duct.

2. **7' TRACK DUCT:** These track ducts are seven feet long. They are often mounted outside of the track near the switch machine. A kit is available (P/N 9278-0270) that includes a 7' track duct, a track duct nozzle and a track duct isolation kit.

OTHER DUCTWORK ASSEMBLIES ARE AVAILABLE. CONSULT THE FACTORY FOR SPECIAL DUCTWORK NEEDS.

(INTENTIONALLY LEFT BLANK)

III. INSTALLATION

INSTALLATION SHOULD BE DONE IN THIS ORDER:

A. TIE DUCT OUTLET DUCT/OFFSET DUCT
B. MAIN HAB UNIT/FLEX DUCT
C. POINT NOZZLES AND TRACK DUCTS
D. GAS
E. CHANGING THE GAS ORIFICE
F. ELECTRICAL

PLEASE READ THROUGH THE ENTIRE INSTRUCTIONS BEFORE BEGINNING INSTALLATION.

A. TIE DUCT

1. Remove the appropriate tie. Choose the tie that will result in the point nozzles being as close to the switch point as possible without interfering with normal switch operation. The distance from the center of the tie duct to the end of the point nozzles is 33”. If necessary, up to 10” may be cut off each point nozzle.

2. Remove sufficient ballast to provide at least 14” clearance from the bottom of the rails.

3. Carefully slip the tie duct under the rails and position it so that the rails are directly above the tie plates. Ensure that the tie duct is centered between the adjacent ties.

4. Place a rubber pad on the tie plate, then using a suitable lever, raise one end of the tie duct until the rail lies correctly on the pad on the tie plate. Place two e-clip insulators, one on each side of rail, in place and then fasten the rail to the tie plate using two of the four 927248 rail clips. Use a heavy hammer or maul to drive the clips securely into place.

5. While keeping the tie duct supported in place, firmly pack ballast under the tie duct from the rail out to the end.

6. Repeat steps 4 and 5 for the other end of the tie duct.

7. a. Remove the end flange plate nearest the HAB by loosening the six retainer bolts.
b. Install the two-foot heavy duty offset duct (P/N 9278-3403) to the tie duct using hardware and gasket supplied with the offset duct.

8. Firmly repack ballast under the entire tie duct.

B. BUNGALOW PLACEMENT

1. Attach the 2’ flex duct (P/N 9528-4222) to the flame duct using the bolt and gasket kit from the flame duct.

2. Attach the 2’ offset duct (P/N 9528-3103) to the flex duct on the flame duct, using the bolt kit from the offset duct.

3. Position the bungalow to line up with the 2’ heavy duty offset duct and the 2’ offset duct (Refer to Drawing #960n36964).

4. Connect the heavy duty offset duct to the flex duct using the bolts and gasket provided with the offset duct and level the bungalow.

5. Adjustable Air Intake. To start the GHAB in a new location, set the intake screen in the closed position. If there proves to be a moisture problem where frost builds up on the intake screen, the screen can be set in the open position to improve the air intake to the GHAB.

6. The airflow switch differential setting is factory set on “D” which is for elevations below 2000 ft. If your location is set at a higher elevation, this differential setting will need to be adjusted. Adjust per the following instructions:

   a) Remove the galvanized cover over the airflow switch.
   b) Remove the cover from the airflow switch.
   c) Adjust the differential wheel on the base of the airflow switch as follows:

      Below 2000 ft elevation, set Airflow Differential Wheel to “D”
      Below 4000 ft elevation, set Airflow Differential Wheel to “C”
      Below 6000 ft elevation, set Airflow Differential Wheel to “B”
      Above 6000 ft elevation, set Airflow Differential Wheel to “A”

C. POINT NOZZLES AND TRACK DUCTS

REFER TO DRAWING 960K32902 FOR TRACK DUCT AND POINT NOZZLE POSITIONS.

1. Attach switch point nozzles to the openings in the outlet duct. Position nozzles for proper airflow direction. Instructions are included in the isolation kit (P/N 9278-0021) used with the point nozzles.

2. Attach track duct nozzles to the outlet duct, observing airflow direction. Refer to instructions included with the isolation kit (P/N 9278-0027).

3. Assemble the individual track duct sections into two complete track duct sections. The mid and heel sections contain splices wrapped around the outside of the duct. Unhook the clips to remove the three cover pieces. The bottom can now be removed from the duct.

To assemble the splice:

a. Center the bottom splice piece on the seam between the two track ducts.
b. Connect the center cover piece over the seam. (NOTE: The center cover piece has slots to contain the bolts on the track duct).
c. Finally connect the two end cover pieces.

4. Lay the track ducts on the rail ties alongside where they will be installed.

5. Refer to the drawing 92774. Place the track duct support brackets in position on the ties so that one is near the heel end and one near each joint. Use the lag bolts to fasten the brackets in place. Lay the track duct on the bracket bases. Place the hold-down straps over the track ducts. Attach the hold-down strap to the track duct support brackets by inserting the spring clip into the strap.

6. Push in the square knockouts in the track ducts where airflow is desired. The knockout should be pushed in and bent completely so that no portion of the knockout obstructs the airflow in the duct. Knockout tabs that are not bent back completely will obstruct the airflow as it moves through the track duct resulting in reduced air pressure and airflow further along the track duct.

7. Inspect the track duct nozzles for proper operation. The damper plate should rotate without binding. Ensure that the damper plate is in the proper position, then tighten the locking nut. Ensure that the damper plate is locked firmly in place.

D. GAS CONNECTION

CAUTION

When tightening gas line fittings or components to the HAB unit be sure that you do not rotate the pipe that enters the blower unit. This could cause the gas control valve inside the blower unit to rotate also. Please reference the label attached just above the pipe that enters the blower unit

1. The following items are shipped in a carton marked "GAS LINE ACCESSORIES", along with various pipe fittings, so that they may be arranged to fit the particular installation. Refer to Instruction Sheet R9500-0027 included with Gas Line Accessories for the proper placement of these components.

Flexible pipe (P/N 61052)
Y strainer (s) (P/N 45040)
Manual shutoff valve (P/N 45017)
Low pressure regulator (P/N 45047)
Spring RED (P/N 45142)

2. The following items are available as optional items
* High pressure regulator (P/N 45103)
* 36" Gas tank "pigtail" (P/N 60127)
* 12" Gas tank "pigtail" (P/N 45038)
* Remote gas valve (P/N 45036)

NOTE: A propane package is available (P/N 9458-0100) that includes a 36" tank pigtail, high pressure regulator, gas line strainer, gauge, remote solenoid valve in a pole mount enclosure, and a 4X4X8' post.

FOR NATURAL GAS INSTALLATION PROCEED TO STEP 5

3. *Install the copper "pigtail" to the propane tank. Each end of the pigtail is a reverse thread.

4. *Install the high pressure (red) regulator to the pigtail. Remember reverse thread on the pigtail connection.

5. Install the "Y" strainer downstream (but near) the high pressure regulator, or natural gas source.

6. *Install the remote gas valve downstream (but near) the "Y" strainer. Electrical connections from the remote gas valve are made to terminal posts TS1-10 (115vac) and NEUTRAL on the HAB unit. The valve must be mounted with the inlet and outlet horizontal, and the coil upwards.

7. Install adequate size gas pipe from the remote tank location to the main HAB unit. Check with local gas supplier for sizing recommendations.

8. The remaining gas line components are attached to the HAB unit, as shown on drawing R9500-0027. Remember to position the regulator vent fitting facing sideways so that moisture will not enter the regulator.

9. If you are having problems adjusting the gas pressure low enough, the spring in the low pressure regulator must be changed. To change the spring, complete the following steps:

a. Try adjusting the low pressure regulator for proper fuel pressure. If it can't be adjusted, follow instructions listed below for changing the regulator spring.

b. Turn power off and close manual gas valve.

c. Remove the plug on top of the regulator.

d. Turn the white plug inside the regulator counter-clockwise until it can be removed.

e. Replace the violet spring with the red spring provided in the gas accessory kit.

f. Replace the top plug.

g. 1. Go to gas pressure menu to adjust.

2. Turn the manual gas valve to "ON" position and turn power on.

3. Place the AUTO/OFF/FORCE switch (SW1) in the "FORCE" position.

5. Place the burner control select in the hi-only position.

6. After the 30-second pre-purge period, the unit will ignite. Check the pressure gauge. Adjust the white

plug in regulator until the display reads 11” water column for propane or 7” water column for natural gas. NOTE: Clockwise to increase pressure, counter-clockwise to decrease pressure.

7. Let the GHAB run for a 10 minute period.

8. After the 10 minute period, take temperature readings at both point nozzles.

9. Determine the ambient temperature at the location and subtract the ambient temperature from the point nozzle reading. This temperature should not exceed 250˚F for optimum efficiency.

10. If the temperature is above 250˚F, adjust the gas pressure at the low pressure regulator down (1” w.c. at a time) until you reach the desired temperature.

h. Replace the top plug.

* OPTIONAL ITEMS AVAILABLE FROM RAILWAY EQUIPMENT CO.

(INTENTIONALLY LEFT BLANK)

E. CHANGING THE GAS ORIFICE

1. This unit uses an orifice plate instead of individual orifices. The orifice plate contains the orifices for both propane and natural gas for both stages of operation.

CAUTION

2. Make sure the main circuit breaker is in the **OFF** position and the manual gas valve is closed before working on the HAB unit.

3. Remove the bottom intake cover from the HAB unit.

4. On the right hand side of the gas assembly you will see the orifice plate. The orifice plate has a tab facing out that says NG for natural gas or LP for propane. This will tell you how the unit is currently set up.

5. To change from one fuel to the other:

a. There are four bolts on each gas coupling plate. You need to fully remove the top two bolts on each coupling plate and you need to back out the bottom two bolts on each coupling plate 1/2 to 3/4 of an inch.
b. On the inlet manifold (left hand side of the gas assembly) you need to remove the two bolts securing the manifold to the outside of the GHAB.
c. You can now carefully slide the gas assembly to the left to free the orifice plate.
d. The orifice plate can be pulled away from the outlet manifold and up and out. NOTE: Take care removing the orifice plate so you don't damage the O-rings.
e. The orifice plate can now be flipped over for the other fuel and re-inserted in between the gas coupling and outlet manifold. NOTE: Take care replacing the orifice plate so you don't damage the O-rings.
f. Slide the gas assembly back to the right and insert the top bolts on the coupling plates.
g. Verify the tab facing out on the orifice plate is now the correct fuel.
h. Evenly tighten the eight bolts on the coupling plates.
i. Replace the bolts on the inlet manifold bracket (outside of GHAB).
j. Re-install the lower intake cover.

6. Turn on power and manual gas valve.

7. Test unit and check regulator adjustment and output temp.

F. ELECTRICAL CONNECTION

1. There are knockouts on the side and bottom of the control enclosure for incoming electrical wires.

CAUTION

THE 230VAC SUPPLY LINES SHOULD BE SIZED TO ALLOW FOR THE AC MOTOR START-UP CURRENT WHICH IS 78 AMPS. UNDERSIZED CONDUCTORS OR LONG WIRE RUNS COULD DAMAGE THE MOTOR.

2. **INCOMING POWER:** The incoming power should be connected directly to the main circuit breaker. The neutral should be connected to the neutral lug TS1-N. The neutral should be grounded at the source.

3. **GROUND:** The chassis ground TS1-G should be tied directly to earth ground.

SPECIAL NOTE: THE CONTROL CHASSIS AND THE REST OF THE MAIN HAB UNIT MUST BE CONNECTED TO GROUND/NEUTRAL. THE RUBBER PAD BETWEEN THE RAIL AND TIE PLATE ALONG WITH THE E-CLIP INSULATORS WILL INSULATE THE MAIN UNIT FROM THE TRACKS.

4. **CONTROL INPUT:** Remote operator control can be provided by a circuit closure applied between terminal posts TS1-1 and TS1-2.

5. **INDICATION:** Reply indication can be done two ways:

   a. Dry contact closure: Terminal posts TS1-3 and TS1-4 will provide a dry contact closure for indication when the unit is operating under remote control.

   b. +24 VDC: Place a jumper between terminal posts TS1-2 and TS1-4. +24 VDC indication is now present on post TS1-3 with common at terminal post TS1-6.

6. **FAIL:** Reply fail can be done two ways:

   a. Dry contact closure: Terminal posts TS1-5 and TS1-4 will provide a dry contact closure for fail when the unit is in a fault mode.

   b. +24 VDC: Place a jumper between terminal posts TS1-2 and TS1-4. +24 VDC fail is now present on post TS1-5 with common at terminal post TS1-6.

7. **DUCT WORK OVERTEMP SENSOR (P/N 9338-0355):**

   a. On the tie duct remove the two bolts holding down the overtemp sensor cover nearest the HAB unit. Install the sensor onto the duct work using the two bolts that were removed.

   b. Run conduit along duct work back to HAB enclosure; connect connector to enclosure knock out; tighten. (NOTE: Cut conduit to length if needed.)

   c. Run wires from sensor into enclosure and plug connector into

OVERTEMP (RED) J10 located on the control module.

d. Use five clamps (P/N 60030) to secure conduit to the side of duct work using existing screws.

8. RAIL TEMP SENSOR (P/N 9228-0615)115# rail: (P/N 9228-0616)136# rail

a. Attach the sensor to the outside web of the stock rail approximately four feet ahead of the point nozzle. Use spring clips to attach to rail.

b. Run wires from sensor into enclosure and plug connector into RAIL TEMP (YELLOW) J11 located on the control module.

IV. CONTROL MODULE

A. DESCRIPTION

The hot air blower control module contains all of the elements and functions necessary for advanced snow melter operation. The unique dual-chip microcomputer has been programmed with logic and timing sequences to provide complete heater control as well as operational control and system interface. Some of the many features included in the control module are:

Auto-Off-Local selector switch
Adjustable air temperature setting
Built-in snow detector (Requires Optional Snow Detector Head)
Adjustable start-up delay sequence
Adjustable run timer for timed or continuous operation
Adjustable snow detect timer for use with optional snow detector
Operator control and indication
Remote fault reset
Audible tone before blower start-up
Input/output status indication lights:

- Inputs:
  - Air temperature
  - Remote Control
  - Moisture Detector One or two snow detector(s) (Optional)
  - Airflow switch
  - Flame Sensor
  - Rail Temp Sensor
  - High Temp Sensor
- Outputs:
  - Blower motor
  - Ignition spark
  - External Gas Valve
  - Hi Gas valve
  - Low Gas valve
  - Indication
  - Fail
- Flame safety control:
  - 10 second tone before blower turn on
  - Air flow proving
  - 30 second pre-purge before ignition
  - Direct spark ignition
  - 10 second maximum ignition period before lock-out
  - Rectification type flame rod sensor
  - Automatic retry on flame loss
  - 4 minute post-purge period after gas valve turn-off
  - Automatic reset
  - Fault if flame does not go out after gas valve is commanded off

B. SET-UP AND ADJUSTMENTS: To change settings and adjust times do the following:

Mode Up Push Button

Pushing the Mode Up push button (PB2) will cycle up through the menus. Each time you press the mode up push button you will advance one menu selection.

Mode Down Push Button

Pushing the Mode Down push button (PB3) will cycle down through the menus. Each time you press the mode down push button you will move down one menu selection.

Increase Values

The Increase Values push button (PB4) allows you to increase the values.
NOTE: Values will be saved.

Decrease Values

The Decrease Values push button (PB5) allows you to decrease the values.
NOTE: Values will be saved.

The following is the layout of the controller menu:

Controller Menu

The controller has 6 menus categories, they are:

1. Status
2. Fault History
3. Set Points
4. Factory Defaults

Menu Selection

To select the desired menu, press the Mode Up or Down button until *****MENU SELECT***** is displayed, on line 1, and then use the Increase or Decrease Value button to select the appropriate menu. Once the appropriate menu is selected, use the Mode Up or Down buttons to view the contents of the menu.

NOTE: Use the Increase or Decrease Values button to change setpoint values.

STATUS MENU

1. **OUTSIDE TEMP AND PRESET VALUE**
   Displays the current ambient temperature and temperature preset value. If ambient temperatures is below the preset value, the unit will start if requested.

2. **MOTOR CURRENT AND MOTOR VOLTAGE**
   Motor current displays the actual motor current in amps while motor is running. Motor voltage displays the actual motor voltage in volts while motor is running.

3. **GAS PRESSURE AND DUCT PRESSURE**
   Gas pressure is the actual differential pressure at the burner. The unit of measure is inches of water ("H2O). To view gas pressure, the burner should be burning. The correct setting should be 11"H2O for propane, be 7"H2O for natural gas. While adjusting, the burner should be in high only. Adjust regulator to change gas pressure value. Duct temperature is the actual duct temperature in degrees F or C.

4. **FLAME CURRENT**
   Flame current displays the actual flame current in micro amps while a flame is present.

5. **RAIL TEMP AND DUCT TEMP**
   Rail temperature is the actual rail temperature in degrees F or C. Duct temperature is the actual duct temperature in degrees F or C.

6. **AC FREQUENCY**
   Displays the frequency of the line voltage.

7. **TOTAL GAS AND RESET GAS**
   Total gas displays the calculated amount of gas that has been used. The unit of measure is gallons if propane is selected. The unit of measure is cubic feet if natural gas is selected. Reset gas is the same as total gas except it can be reset. To reset, press the decrease value button.

8. **HOUR METER AND RESET HOUR**
   Hour meter displays the total hours that GHAB has been running. Reset hour is the same as hour meter except it can be reset. To reset, press the decrease value button.

9. **TANK LEVEL, BAT AND TEMP**
   Tank level displays the actual level of propane tank in percent full (optional tank level monitor must be installed). Bat displays the battery level of the tank monitor. Temp displays the temperature in the battery monitor.

FAULT HISTORY MENU

NOTE: Some faults may not show in Fault History until there is an actual fault. Press the decrease or increase value button to reset fault count.

1. **FLAME LOSS AND FLAME ON**
   Flame loss counter is total count of flame loss faults. Flame on counter is total count of flame on faults.

2. **SAIL LOSS AND SAIL ON**
   Sail loss counter is total count of sail loss faults. Sail on counter is total count of sail on faults.

3. **MOTOR V FAULT AND OVERLOAD**
   Motor volts low or high counter. Overloads counter is total motor overloads faults.

4. **GAS VALVE LEAK AND PRESSURE FAULT**
   Gas valve counter is total count of leaking gas valve faults. Gas pressure low or high counter.

5. **DUCT PRESS FAULT AND VAP. PRESS LOW**
   Duct pressure fault counter is total count of duct pressure faults. Vaporization low fault counter is total count of vaporization low faults.

6. **MOTOR CURRENT AND COMM RESET**
   Motor current fault is total count of motor current faults. Comm reset fault is total count of communication reset faults.

7. **DAY COUNTER AND POWER UP**
   Day counter is the number of days the unit has been powered up. Power up counter is the total number of times the control module has been turned on.

8. **OVER TEMPS WARNING COUNTER**
   Counts the total number of Over Temp warnings.

9. **AUTO OVERTEMP RESET COUNTER**
   Counts the total number of times the Over Temp was reset.

SET POINTS MENU

1. USER LEVEL

The options are BASIC and ADVANCED.

Basic – access to basic menus.

Advanced – access to advanced menus (requires password).

2. PASSWORD

A password is needed to access the advanced menus. To enter in the password, use the increase or decrease value buttons. Password 5 allows advanced menu items to be changed.

3. SELECT TEMPERATURE SETPOINT

The ambient temperature below which the unit will energize is set on this screen. When the outside temperature is below this setpoint, the unit will be allowed to operate if requested. The factory default is 38° F (3° C). The range is from 0° F to 100° F (-18° C to 38° C).

4. SELECT RUN TIMER VALUE

The run timer can be set from 0 to 1000 minutes. If zero is selected, the outputs will operate continuously, until control on is disabled. If another value is selected, the unit will run until the run timer counts down to zero, after which the unit will shut down and drop indication. The unit can be restarted by removing the contact closure between TB2-1 and 2, then reinstalling it. If Run Timer Pulse Mode is activated, the minimum run time value is 10 minutes. The factory default setpoint is 60 minutes.

5. RUN TIMER PULSE MODE

The choices are on or off, factory default is off. When on is selected, a pulse will start run time sequence and continue until run timer has timed out. When off is selected, run timer will time out as long as remote is on. When remote on is removed blower will stop.

6. SELECT SNOW TIMER VALUE

The snow timer can be set from 10 to 1000 minutes. The snow time starts counting down when the moisture detector no longer sees snow. The factory default setpoint is 60 minutes.

7. SELECT SNOW SENSOR SPEED

Snow sense speed sets the delay time after the moisture detector sees moisture and starts the snow cycle. The delay time can be set from 1 to 60 seconds. The moisture sensor must see moisture for entire time to start cycle.

8. SELECT SNOW INDICATION

The choices are OFF or ON. With snow indication off, indication will remain off during snow time if no faults are present. With snow indication on, indication will remain on during snow time if no faults are present.

9. SELECT START DELAY VALUE

The start delay timer can be set from 0 to 250 seconds in 10 second increments. It is used to delay the start of GHAB so when several blowers are at the same location they do not start at same time.

10. SELECT BURNER OPERATION

The choices are LOW, HIGH, AUTO, AUTO OFF.

Hi Only – 100% BTU output with or without Rail Sensor.

Low Only – 50% BTU output of Hi with or without the rail sensor.

Auto – Switches between high and low dependant on the rail & duct temperature sensor and setpoint. Note: If no rail sensor is connected, it will run at low (50% output). Units with only single stage installed, should select high only.

Auto Off – When rail temperature reaches the rail temp setpoint, the GHAB will shut down. When the rail temperature lowers to the ambient temperature setpoint, the GHAB will start again.

11. OPERATION MODE

The choices are NATURAL, PROPANE, COLD AIR, COLD AIR/PROPANE, COLD AIR/NATURAL.

NATURAL – The GHAB's burner is fueled by natural gas.

PROPANE – The GHAB's burner is fueled by propane.

COLD AIR – The GHAB will turn its blower on with air temperature. It will not use a burner.

COLD AIR/PROPANE –The GHAB will turn its blower on with air temperature. It will then turn its propane burner on with moisture or control.

COLD AIR/NATURAL –The GHAB will turn its blower on with air temperature. It will then turn its natural gas burner on with moisture or control.

12. SELECT MOTOR SIZE

The choices are:

2 HP 230V 1PH, 3 HP 230V 1PH, 5 HP 230V 1PH,
2 HP 460V 3PH, 3 HP 460V 3PH, 5 HP 460V 3PH,
2 HP 575V 3PH, 3 HP 575V 3PH, 5 HP 575V 3PH,
2 HP 3PH Drive, 3 HP 3PH Drive, 5 HP 3PH Drive
2 HP 230V 3PH, 3 HP 230V 3PH, 5 HP 230V 3PH.

13. RAIL TEMP SETPOINT
This can be set from 0° F to 280° F (-18° C to 138° C).

14. DUCT TEMP SETPOINT
This can be set from 150° F to 250° F (66° C to 121° C).

15. DUCT PRESSURE HIGH SETPOINT
This can be set from 3” H2O to 30” H2O.

16. DUCT PRESSURE LOW SETPOINT
This can be set from 0” H2O to 5” H2O.

17. GAS PRESSURE HIGH SETPOINT
This can be set from 7” H2O to 30” H2O.

18. GAS PRESSURE LOW SETPOINT
This can be set from 0” H2O to 10” H2O.

19. MOTOR CURRENT HIGH SETPOINT
This can be set from 5 to 100 amps.

20. MOTOR CURRENT LOW SETPOINT
This can be set from 0 to 10 amps.

21. MOTOR VOLTAGE HIGH SETPOINT
This can be set from 250 to 650 volts.

22. MOTOR VOLTAGE LOW SETPOINT
This can be set from 150 to 550 volts.

23. AC FREQUENCE HIGH SETPOINT
This can be set from 0 to 100 Hz.

24. AC FREQUENCE LOW SET POINT
This can be set from 0 to 100 Hz.

25. LOCAL WITH/WITHOUT AIR TEMPERATURE
Sets the local feature to, or not to, be dependant on the air temperature.

26. OVERTEMP BYPASS

With overtemp bypass enable, the unit will not fault if the overtemp sensor is missing. This feature is only for use on units that have a two wire overtemp sensor. Current production units are equipped with a four wire overtemp sensor. **NOTE: BYPASSING THE OVERTEMP SENSOR MAY CAUSE HARMFUL OPERATING CONDITIONS.**

The following steps are required to bypass the overtemp sensor:

a) Display: MENU SELECT
SETPOINTS

b) Select: ADVANCED

c) Enter password: 10

d) Display screen: OVERTEMP BYPASS
DISABLED

e) Change to: ENABLED

27. SELECT F OR C

Will change the temperature scale to either Fahrenheit or Celsius.

28. AUTO OVERTEMP RESET

Auto overtemp reset will reset the overtemp once it has been triggered.

29. SELECT TANK SIZE

The choices are no tank sensor, tank heater, 250 gallon increments up to 5,000 gallons. No tank sensor should ALWAYS be selected UNLESS a tank sensor reporting to the module is installed. Note: Tank Size menu is only available if propane is selected.

30. TANK SERIAL #

Tank serial # is the tank level monitor's serial number. This is only used if a tank sensor reporting to the module is installed.

31. MACHINE SERIAL NUMBER

Machine serial # is the serial number of the whole GHAB unit.

32. SERIAL NUMBER/MAC

Shows the MAC address for the unit.

33. AMBIENT OFFSET

Used to calibrate the ambient temperature sensor.

34. RAIL OFFSET
Used to calibrate the rail temperature sensor.

35. DUCT OFFSET
Used to calibrate the duct temperature sensor.

36. PROG REV AND DATE
Shows the program revision and the date it was complied.

37. BOOTLOADER
The choices are DO NOT RUN BOOTLOADER, START FACTORY DEFAULT BOOTLOADER and START NEW CODE.

DO NOT RUN BOOTLOADER – Will not run the bootloader.
START FACTORY DEFAULT BOOTLOADER – Will run the factory bootloader.
START NEW CODE – Will download and run the new code.

FACTORY DEFAULTS MENU

Factory default is used to place all parameters back to factory default settings.
To restore to factory default:
In the menu selection, select FACTORY DEFAULTS and then press either the up or down mode button. Next press either the increase or decrease value button to restore to default.

AUTO/OFF/LOCAL SWITCH (SS1)

a) AUTO: This position will allow operation by placing a circuit closure across terminal posts 1 and 2. It will also allow operation by an optional snow detector.

b) OFF: If off, GHAB cannot be run from remote or snow detector.

c) LOCAL: If LOCAL without air temp parameter is enabled, placing SS1 in the LOCAL position enables the snow melter regardless of outside air temperature. The snow melter will remain on until LOCAL is turned off. This is useful for hot weather testing.

C. LED STATUS INDICATING LIGHTS

1 AIR TEMPERATURE:
On when the ambient air temperature is below set point.

2 MOISTURE:
On when the optional snow detector sensing head(s) senses moisture.

3 CONTROL:
On when there is a circuit closure across terminal posts 1 and 2.

4 BLOWER:
On when the controller has turned on the output to the blower motor contactor.

5 AIRFLOW:
On when the sail switch in the air stream is sensing adequate airflow.

6 IGNITION:
On when the controller has enabled the output to the ignition transformer.

7. HIGH GAS VALVE:
On when the controller has enabled the output to the high gas valve.

8. LOW GAS VALVE:
On when the Controller has enabled the output to the Low Gas Valve.

9 FLAME:
On when the flame sensing determines that there is proper combustion.

10. INDICATION:
On when there is a circuit closure across terminal posts 1 and 2 and the unit is operating, or the air temperature is above the set point. Also may be on when there is a fault condition under snow detector.

11. FAIL:
This LED is on when ever a fault is present.

D. OPERATION

With switch SS1 in the “auto” position, the unit can be activated by applying a circuit closure between terminals TS1-1 and 2. If the outside temperature is above set point the unit will not start a snow melt sequence but will turn on the “indication” LED and provide a relay contact closure between TS1-3 and 4 to indicate to the remote station that the unit is operational.

If a circuit closure exists between TS1-1 and 2, and the air temperature is below set point. the unit will begin a snow melt sequence. The unit executes a 0 to 300 sec. time delay depending on the setting of the START DELAY TIMER. Then, a 10-sec. audible tone sounds as a warning that the blower motor is about to turn on.

The airflow switch is checked to see if it is closed. If it is, the blower will display SAIL SWITCH ON FAULT.

If the airflow switch is open the motor will turn on. After the blower motor is turned on, the airflow switch is monitored. It closes if airflow is normal. If it does not close within 10 sec. (or 30 sec. for an AC drive) after blower turn-on, the blower displays SAIL SWITCH OFF FAULT. When the airflow switch closes, a 30 second prepurge time will start. After the prepurge time is completed the gas valve opens, the ignition turns on and the burner is monitored for a normal flame condition. If a flame is not detected within 10 seconds, the gas valve is closed, the ignition spark is removed and the blower displays NO FLAME DETECTED FAULT.

If a normal flame condition is detected the “indication” contact closure is established between TS1-3 and 4. The unit will run for a period of time determined by the setting of the RUN TIMER. If the run timer is set at “0” the unit will continue to run until the circuit closure between TS1-1 and 2 is removed.

If the blower is equipped with the two stage gas valve option and the rail temp sensor is installed, then under normal operation when the rail reaches the preset temperature setting, the low gas valve will open and the high gas valve will close. This will result in a fuel reduction of 50%. When the rail falls below the programmed temperature, the high gas valve will open and the low gas valve will close resulting in the burner returning to 100% capacity.

If the blower is equipped with the two stage gas valve option and the duct temp sensor is installed, then under normal operation when the duct reaches the preset duct temperature setting, the low gas valve will open and the high gas valve will close. This will result in a fuel reduction of 50%. When the duct falls below the programmed temperature, the high gas valve will open and the low gas valve will close resulting in the burner returning to 100% capacity. If the duct temp sensor sees a temperature above 325 ^{o} F (163º C) both gas valves will be disabled. This prevents over temps.

There is a burner control adjustment available in the control module adjustments that allow the burner to be set to high only, low only or automatic controlled by the rail temp sensor. If the two-stage option is not installed, the burner control switch should be set to high only. Refer to (SET UP AND ADJUSTMENTS) in Section IV 8.

SNOW DETECTOR OPERATION. If the unit is operating with one or two optional snow detector assemblies and moisture is detected by either (or both), a snow melt sequence will begin, provided that the air temperature is below the set point. The unit will start as described in Section IV Part B under (Select Snow Timer).

E. FAULT CONDITIONS

1. SAIL SWITCH ON FAULT:

During startup the processor checks the status of the airflow switch. If the airflow switch is closed or shorted the blower motor will turn on and the blower will run a 4-minute purge to try to clear the airflow switch. The motor will then shut off and sit idle for 1 minute. Upon completion of this 5-minute cycle, the blower will once again check the airflow switch for proper operation. If the airflow switch still shows that it is closed it will run the 5-minute loop again. This will repeat until fault is cleared or blower is no longer called for.

2. SAIL SWITCH OFF FAULT:

Sail switch off fault is set when blower is running and air flow switch is open. After the fault is set the blower motor will run a 4-minute purge to try to clear the airflow switch. The motor will then shut off and sit idle for 1 minute. Upon completion of this 5-minute cycle, the blower will once again check the airflow switch for proper operation. If the airflow switch still shows that it is open it will run the 5-minute loop again. This will repeat until fault is cleared or blower is no longer called for. Check to see if the sail switch is free to move and if there are any obstructions in duct work.

3. NO FLAME DETECTED FAULT:

No flame detected fault is set when blower is running and air flow switch is closed with gas valve open. If no flame is detected within 10 seconds the fault will be set. After the fault is set the blower motor will run a 4-minute purge to try to clear the flame rod. The motor will then shut off and sit idle for 1 minute. Upon completion of this 5-minute cycle, the blower will once again check the flame rod for proper operation. If no flame is present it will run the 5-minute loop again. This will repeat until fault is cleared or blower is no longer called for. Check to see if the flame rod is shorted to ground, the flame rod is loose, the flame rod is dirty or if the insulators is fully installed so that no moisture can short out the flame rod.

4. FLAME DETECTED ON FAULT:
Flame detected on fault is set when blower is running and air flow switch is closed with gas valve closed. If flame is detected before gas valve is opened the fault will be set. After the fault is set the blower motor will run a 4-minute purge to try to clear the flame rod. The motor will then shut off and sit idle for 1 minute. Upon completion of this 5-minute cycle, the blower will once again check the flame rod for proper operation. If flame is present with gas off it will run the 5-minute loop again. This will repeat until fault is cleared or blower is no longer called for. Check to see if the flame rod is shorted to ground, the flame rod is loose, the flame rod is dirty or if the insulators is fully installed so that no moisture can short out the flame rod.

5. GAS VALVE FAILURE:
During the blower shutdown operation if the unit senses flame after the post-purge, the unit will not shutdown. Instead it will go into gas valve failure mode. In this mode the blower continues to run, the reply will also indicate a problem, and the buzzer will sound. The unit will lock out all other operations and will not be able to be reset except at the unit itself.

6. CHECK FUSE # 1 24 VDC POWER:
Fuse # 1 is tripped. Check the following circuits:

a. Overtemp switch and wiring.
b. Check TS1-2 +24 control on wiring.

7. CHECK FUSE # 2 IGNITION TRANSFORMER:
Fuse # 2 is tripped. Check the following circuits:

a. Ignition transformer and wiring.

8. CHECK FUSE # 3 GAS VALVE / SAIL SWITCH:
Fuse # 3 is tripped. Check the following circuits:

a. Check Sail switch and wiring.
b. Check hi and low gas valve and wiring.
c. Check external gas valve and wiring.

9. CHECK FUSE # 4 BLOWER MOTOR:
Fuse # 4 is tripped. Check the following circuits:

a. Check blower motor contactor and wiring.

10. CHECK FUSE # 6 SNOW HEAD # 1:
Fuse # 6 is tripped. Check the following circuits:

a. Check snow detector head # 1 and wiring.
b. Check Gas pressure sensor and wiring.
c. Check Duct pressure sensor and wiring.

11. CHECK FUSE # 7 SNOW HEAD # 2:
Fuse # 7 is tripped. Check the following circuits:

a. Check snow detector head # 2 and wiring.

b. Check Sail switch and wiring.

12. CHECK FUSE # 9 ANALOG 5VDC:
Fuse # 9 is tripped. Check the following circuits:

a. Check 5V supply for pressure sensor.

13. CHECK FUSE # 10 PRESSURE/BAT CHARGER:
Fuse # 10 is tripped. Check the following circuits:

a. Check pressure sensor.
b. Check 24V supply for battery backup.

14. OVERTEMP FIX PROBLEM PRESS DECREASE:
Overtemp sensor has tripped. If the temperature inside the Tie duct exceeds 375 degrees F, it will cause the ductwork overtemp circuit to trip, shutting down the HAB system. Only pushing the decrease value push button will reset the unit, giving opportunity to check the cause of the overtemp condition.

15. OVERTEMP FIX PROBLEMPRESS DECREASE ___ MIN:
The overtemp sensor has tripped. The HAB system will shut down for some time period then it will reset the unit. NOTE: AUTO OVERTEMP RESET must be enable in order to see this fault.

16. OVERTEMP WARNING RESTART IN ___ SEC:
If the temperature is close to overtemp value, the unit will restart in a certain time period.

17. OVERTEMP MISSING INSTALL OVERTEMP:
Caused my missing overtemp sensor.

18. MOTOR VOLTAGE LOW:
Motor voltage low is caused by inadequate electrical service supply. During motor start up if motor voltage drops below 190 VAC, the motor will eventually be damaged. If this under-voltage occurs, an error will be set. Press decrease value button to clear the fault.

19. MOTOR VOLTAGE HIGH:
Motor voltage high is caused by high motor voltage. Can be caused by high voltage from the electric company.

20. MOTOR OVERLOAD, RESET OVERLOAD DEVICE:
High motor current will trip the motor overload on the control panel. This device is connected to the bottom of the motor contactor on the control panel. Reset by pressing the red button on the device. Check unit for high motor current, bad bearings, or obstructions in the blower wheel.

21. MOTOR CURRENT LOW:
Caused by low motor current.

22. MOTOR CURRENT HIGH:
Motor current high is caused when sensed current is 3 amps over motor name plate for 20 seconds. Check motor for high current, bad bearings, obstruction in blower wheel.

23. GAS PRESSURE LOW:
Gas pressure low is caused by supply gas pressure during operation dropping to a low level. Check gas delivery system.

24. GAS PRESSURE HIGH:
Gas pressure high is caused by high gas pressure going to the burner. Check gas delivery system. Adjust the regulator on the gas delivery system to lower the gas pressure.

25. DUCT PRESSURE LOW:
Duct pressure low is caused by not enough duct back pressure. Possible causes are missing flame cover or missing duct work.

26. DUCT PRESSURE HIGH:
Duct pressure high is caused by too much duct back pressure. Possible causes are duct work obstructions

27. PROPANE TANK LOW WARNING FILL TANK:
Propane tank low is caused by low propane tank level. Note propane tank level monitor must be installed and setup, for this warning to appear.

28. TANK VAPORIZATION PRESSURE LOW WARNING:
Tank vaporization pressure low warning is caused by low tank temperatures.

29. UTILITY POWER LOST:
Utility power lost is caused by no incoming AC voltage. Must have a battery backup in order to receive this fault.

V. SEASONAL MAINTENANCE

A. SPRING

1. Turn off gas source.
2. Turn off electric power at source.
3. Disconnect and remove the control module. Store in a clean, dry place.
4. Turn off manual gas valve.

B. FALL

1. Check all ductwork for clear airflow. Ensure that the point and track duct nozzle screens are not damaged and are completely covering the openings. Make sure that no debris or rodents have obstructed any area of the ductwork.
2. Inspect the track duct nozzles for proper operation.
3. Remove the flame duct cover. Check the burner. Make sure the spark igniter plug and flame rod are in good, clean condition. Check the wiring to make sure rodent or vibration have not damaged the insulation.
4. Check the airflow sail switch to make sure it is operating properly.
5. Replace the flame duct cover.
6. Install the control module and connect the wires.
7. Turn on the gas source.
8. Turn on the manual gas valve.
9. Turn on the electric power at source.
10. Perform the gas pressure regulator adjustment procedure as described on the following page of this manual.
11. Perform a flame failure test:
    a) Place switch SS1 in the LOCAL position.
    b) Turn off the manual gas valve.
    c) Turn on the main circuit breaker.
    d) After 40 seconds (plus any start delay period) the fault message NO FLAME DETECTED FAULT should be displayed. If the fault does not appear, the control module is faulty and should be replaced.
12. Check the flame current. Refer to Section IV, Control Module (B), SET-UP AND ADJUSTMENT 19.
13. Check the air temperature for proper setting.

VI. LOW PRESSURE REGULATOR ADJUSTMENT/OUTPUT TEMP TEST

A. Place switch SS1 in the LOCAL position.

B. Turn the manual gas valve to “ON” position and turn power on.

C. Place the burner control in the hi-only position. Refer to Section IV SET-UP AND ADJUSTMENTS B8.

D. After the 30-second pre-purge period, the unit will ignite. Check the gas pressure value. Adjust the white plug in regulator until the gauge reads 11” water column for propane or 7” water column for natural gas. NOTE:

Clockwise to increase pressure, counter-clockwise to decrease pressure.

E. Let the GHAB run for a 10 minute period.

F. After the 10 minute period, take temperature readings at both point nozzles.

G. Determine the ambient temperature at the location and subtract the ambient temperature from the point nozzle reading. This temperature should not exceed 250˚F for optimum efficiency.

H. If the temperature is above 250˚F, adjust the gas pressure at the low pressure regulator down (1" w.c. at a time) until you reach the desired temperature.

I. Replace the top plug.

J Return all switches to their normal operating position.

VII. TROUBLESHOOTING

A. UNIT DOES NOT START

1. Check circuit breaker.
2. Check control fuse. The control fuse is an auto resettable type fuse. To check, turn the main circuit breaker off for one minute, then turn back on
3. Check for 18VAC between the following points:
   TS1-6 and TS1-7
   TS1-6 and TS1-8.
   Change T1 control transformer if either measurement is incorrect.
4. Check for air temperature below set point.
5. Is the control module programmed for a start-up delay?
6. Monitor the fault display on the control module.
7. Turn the circuit breaker off, and then reset the motor overload relay. The motor overload relay is adjustable. It should be set for the motor name plate current.

B. UNIT DOES NOT MAINTAIN OPERATION

1. Monitor the flame current as described in section IV B. 19.
2. Check the fuel supply. Refer to Section VI.D.
3. Check 230VAC and 115VAC from either leg to the center tap neutral (with the unit running). It must be within +10% to -10%.
4. Check the burner. The burner must be clean and free of carbon.

5. The flame rod should be clean and secure. Refer to section IV.B.19. for flame current.
6. Check the wire from the flame rod to the control module for continuity. Pull the white plug connector on the lower right side of the control module. Use an Ohmmeter to measure continuity from the terminal of the flame rod to the white connector. The reading should be less than 1 ohm.

C. LOW HEAT LEVEL

1. Perform a regulator adjustment/output temp test refer to Section VI.
2. Check the fuel supply.
3. Make sure the burner is clean.
4. Make sure the orifice plate is installed for the fuel being used.
5. Check the low pressure regulator.
6. Check to see if the burner control is on low only or if it is in auto and the Rail Temp Sensor setting is forcing it to low output.

D. LOW AIRFLOW

1. Check for obstructions in all ductwork and the air intake.
2. If there is frost buildup on the air intake screen, move the screen to the "open" position.
3. Check the voltage and current levels on the blower motor.
4. Make sure knockouts on the track duct are pushed all the way back in the track duct.
5. Check the spacing between the inlet cone and the blower wheel. The gap should be less than 1/16 of an inch.

E. GAS VALVE

CAUTION

CHECK THE AREA TO BE SURE THERE ARE NO LINGERING GAS FUMES BEFORE DOING ANYTHING WHICH MAY CAUSE A SPARK!

1. Turn off gas to the blower.
2. Turn off power to the blower.
3. Check the gas valve for obstructions.

4. Check the gas valve for proper operation.

F. HIGH HEAT LEVEL

1. Check for proper orifice installation.
2. Perform the low pressure regulator and Temp Test found in Section VI.

VIII. SNOW DETECTOR

A. SNOW DETECTOR INSTALLATION

1. The snow detector sensing circuitry is contained within the control module. All that is required for snow detector operation is to connect the sensing head(s).

2. Either one or two sensing heads may be used.

3. Each sensing head has three lead wires; black, white, and green. Connect as follows:

   a) green: one or both connected to TS1-6.
   b) black #1: connected to TS1-7.
   c) black #2: connected to TS1-8.
   d) white: one or both connected to TS1-9.

   NOTE: Refer to the diagrams when connecting wires for the sensing heads. It is important to properly connect the sensing head wires. Improper connection of the sensing head wires may result in damage to the control module and/or the sensing head.

4. To operate more than one HAB unit from a HAB unit that is controlled by a snow detector(s), connect terminal posts #6 together and terminal posts #9 together. (Do not connect terminal post #6 to terminal post #9.) When connecting snow detectors to more than one HAB unit, first connect one HAB. Then connect the snow detector to one more HAB. If the snow detector does not operate properly, exchange L1 and L2 on the newest HAB circuit breaker. NOTE: BE SURE L1 AND L2 ARE DE-ENERGIZED BEFORE EXCHANGING THEM. Continue to add HABs to the snow detector in the same manner until all the desired HABs are connected. DO NOT EXCEED 200’ CABLE LENGTH (18 AWG WIRE).

5. The sensing heads should be mounted in a vertical position.

6. Experience has shown that positioning a snow detector sensing head in the switch area between the ties and between the switch point and the track duct is effective. A second sensing head is then placed away from the switch area, such as on a bungalow or pole.

B. SNOW DETECTOR OPERATION

NOTE: A snow detector sensing head only detects moisture. With temperature sensing capability, the HAB unit assumes moisture is due to snow when the air temperature is below set point.

All operating functions are similar to remote operation with the following exceptions:

1. INDICATION: During normal operation under snow detector control, the indication contact across terminal posts 3 and 4 will not be closed.

2. TIMED OPERATION: The snow detector has many different time scenarios. Refer to Section IV Part B to determine which scenario best meets the needs in your location.

3. RUN TIMER: During remote operation, if the snow detector senses moisture, the unit will operate according to the settings. The unit will then operate for the duration of the run timer setting.

4. FAULT CONDITION: A fault condition under snow detector control will cause the indication contact across terminal posts TS-3 and TS-4 to close. To reset the unit after a fault condition, momentarily apply a circuit closure between terminal posts TS-1 and TS-2 with Ss1 in the Auto position. The unit may now be operated either under remote control or snow detector control.

C. SNOW DETECTOR MAINTENANCE

The snow detector sensing head contains a small, self-regulating heater that will melt snow or ice into water. The sensing head relies on moisture to create a low resistance circuit path. The heater will also cause the moisture to evaporate within a short period. If the surface becomes non-conductive due to contamination by grease or oil, the sensing head will not operate. To ensure effective and dependable snow detector operation, it is important to inspect the sensing heads frequently and clean them thoroughly if necessary. Use a solution

of water and mild detergent or isopropyl alcohol to clean the sensing grid. Use a clean, dry cloth to wipe the grid. Make sure there is no residue left on the surface.

D. SNOW DETECTOR TROUBLESHOOTING

NOTE: A newly-installed snow detector sensing head should operate 15-20 minutes to allow the internal heater to reach normal operating temperature.

1. NO HEAT ON THE SENSING HEAD

a. Check for voltage between terminal post 6 and 7, and between terminal post 6 and 8. It should be 18VAC (+2VAC). If not:

(1) Check the display on the control module.
(2) The control transformer may be defective.
(3) There may be a bad circuit connection.

b. Remove the black and the green lead wires from the terminal posts. Check resistance between them. If resistance is greater than 10 ohms, the sensing head is defective and should be replaced.

2. DOES NOT DETECT MOISTURE

a. Clean the snow detector as described in Section VIII.C. SNOW DETECTOR MAINTENANCE

b. If unit still does not detect moisture, check the wiring connections between detector head and terminal posts.

c. If unit still does not detect moisture, replace the control module with a known good control module. If still not operating properly, replace the sensing head.

NOTE: If a snow detector head becomes saturated with moisture, it can sometimes be restored to normal operation by removing it and “baking” it in a conventional oven for several hours. Do not exceed 150ºF.

3. CONSTANT INDICATION OF MOISTURE DETECTION

a. Clean the snow detector heads as described in section C, Snow Detector Maintenance.

b. Remove white lead(s) from terminal post 9. If moisture indication is still on, the control module is defective and should be replaced.

IX. SPECIFICATIONS

VOLTAGE :	230VAC, 1PH 60 HZ, 30 Amp (3PH AC Drive)
MOTOR :	2 HP, 3450RPM, TEFC 14 Amp starting current 14 Amp running current
VOLTAGE :	208VAC, 3PH 60 HZ, 15 Amp
MOTOR :	2 HP, 3450RPM, TEFC 35 Amp starting current 6.2 Amp running current
VOLTAGE :	230VAC, 3PH 60 HZ, 15 Amp
MOTOR :	2HP, 3450RPM, TEFC 34 Amp starting current 5.8 Amp running current
VOLTAGE :	460 VAC, 3PH 60 HZ, 15 Amp
MOTOR :	2 HP, 3450RPM, TEFC 17.5 Amp starting current 2.9 Amp running current
VOLTAGE :	575 VAC, 3PH 60 HZ, 15 Amp
MOTOR :	2 HP, 3450RPM, TEFC 19.5 Amp starting current 2.1 Amp running current
AIRFLOW :	2000 CFM
COMBUSTION RATE :	400,000 BTU/HR 200,000 BTU/HR
FUEL :	Propane or Natural Gas
FLOW RATE:	Natural Gas: 400 CFH/200 CFH Propane: 160 CFH/80 CFH 4.4 GPH/2.2 GPH
INDICATION CONTACTS:	30VDC 1A or 125VAC 300mA

X. DRAWINGS

BUNGALOW POSITIONING	960N36964
GHAB SWITCH LAYOUT	9509-0020
GHAB MAIN UNIT	9508-6117
TIE DUCT ASSEMBLY 136LB QUICK CHANGE	9278-4805
TIE DUCT ASSEMBLY 115LB QUICK CHANGE	9278-4605
POINT / TRACK ASSEMBLY RH	9508-4000
POINT / TRACK ASSEMBLY LH	9508-4001
NOZZLE TRACK DUCT ASSEMBLY	927490
ISOLATION KIT, TIE DUCT POINT NOZZLE	9278-0021
ISOLATION KIT, TIE DUCT TRACK NOZZLE	9278-0027
FLAME DUCT	9608-3124
HEAVY DUTY OFFSET DUCT	9278-3403
FLEX DUCT 2’ ST INS W/MIXER	9528-4222
TRACK DUCT, 5’ POINT	9278-0226
TRACK DUCT, 5’ MID	9278-0227
TRACK DUCT, 10’, MID	9278-1201
TRACK DUCT, 10’, HEEL	9278-1202
SWITCH ROD DUCT 7’	9278-0270
TRACK DUCT SUPPORT BRACKET ASSEMBLY	92774
GHAB ELECT. PANEL LAYOUT 230V 1 PHASE	9508-0150
GHAB ELECT. PANEL LAYOUT 3 PHASE	9508-0125
GHAB ELECT. PANEL LAYOUT AC DRIVE	9508-0156
GHAB ELECT. SCHEMATIC 230V 1 PHASE	9504-0124
GHAB ELECT. SCHEMATIC 3 PHASE	9504-0125
GHAB ELECT. SCHEMATIC AC DRIVE	9504-0133
GAS PIPING, 2 STAGE	9608-0138
GHAB MENU FLOW CHART	

LIMITED WARRANTY

XI.

Railway Equipment Co., Inc. ("Railway") warrants all of its products to be free from defects in material and workmanship when used under specified operating conditions and within specified limits. Railway's warranty shall extend for a period of two (2) years from the date of shipment to the original purchaser.

This warranty is expressly in lieu of and excludes all other expressed or implied warranties, including but not limited to warranties of merchantability and fitness for a particular purpose.

Railway, its agents, or representatives shall in no circumstance be liable for any direct, indirect, special, penal, or consequential loss or damage of any nature resulting from the malfunction of the product.

Remedies under this warranty are expressly limited to repair or replacement of the product at the sole discretion of Railway.

Before returning any defective product to Railway, contact the factory at the address or telephone number at the bottom of this article for a Return Merchandise Authorization number and instructions as to how and where the return is to be shipped. Materials received without this authorization will be returned at the customer's expense.

Products returned to Railway under warranty must be shipped freight prepaid, and return freight charges for repaired or replaced products, in or out of warranty, will be at customer's expense.

Railway reserves the right to reject any warranty claim on a product that has been altered by the user or damaged in shipping due to inadequate packaging or mishandling by freight carrier.

By returning a product to Railway the owner grants permission to Railway to open and disassemble the product as required for evaluation. Railway has the sole responsibility for determining the cause an nature of failure, and Railway's determination with regard thereto shall be final. Railway reserves the right to repair or replace any unit at its sole discretion.

A returned product that is found, upon inspection by Railway, to be operational within specification is subject to an inspection and testing fee, regardless of its warranty period.

Railway's liability on any claim of any kind (including negligence) for any loss or damage arising out of or resulting from this agreement, or from the performance of breach thereof, of from the products or services furnished hereunder, shall in no case exceed the price of the specific product or service which gives rise to the claim. All such liability shall terminate upon the expiration of the warranty period of two (2) years, as hereinabove stated.

The furnishing of advice or other assistance without separate compensation therefor will not subject Railway to any liability, either in contract, warranty, tort (including negligence) or otherwise.

Any alteration or modification of the product, or addition on non-Railway components to the product, unless expressly permitted by Railway in its documentation, will void warranty coverage.

This warranty is non-transferable, and warranty coverage is limited to initial user only.

Installation and/or use of the product shall demonstrate acceptance of the terms of this warranty.

Each of the foregoing paragraphs in this article will apply to the full extent permitted by law. The invalidity, in whole or part, of any paragraph will not affect the remainder of such paragraph or any other paragraph.

RAILWAY EQUIPMENT CO.
P.O. Box 68 – Delano, Minnesota 55328 – USA – Tel. (763) 972-2200 Fax (763) 972-2900
E-Mail - mail@rwy.com

(INTENTIONALLY LEFT BLANK)

PARTS LIST					
ITEM	PART NUMBER	REV	UOM	QTY	DESCRIPTION
1	9258-0021	A	EA	1	SNOW DETECTOR
2	9278-0234	B	EA	2	TRACK DUCT 40'
3	9368-0106	E	EA	1	DUCT ISOLATOR KIT, 9 X 9
4	9508-4000	A	EA	1	POINT/TRACK NOZZLE ASSY RH
5	9508-4001	A	EA	1	POINT/TRACK NOZZLE ASSY LH
6	9528-3404	A	EA	1	DUCT, OFFSET, 2' HD NO MIXER
7	9528-4222	A	EA	1	FLEX DUCT 2'ST INS W/MIXER
8	9528-4805	A	EA	1	TIE DUCT, 136# QUICK CHANGE
9	9608-0504	K	EA	1	ASSY, BUNGALOW W 2HP GHAB 240V 1PH

REVISION HISTORY				
REV	ECO #	DESCRIPTION	DATE	BY
K	11-0014	NEW ASSY	06/28/11	GLJ

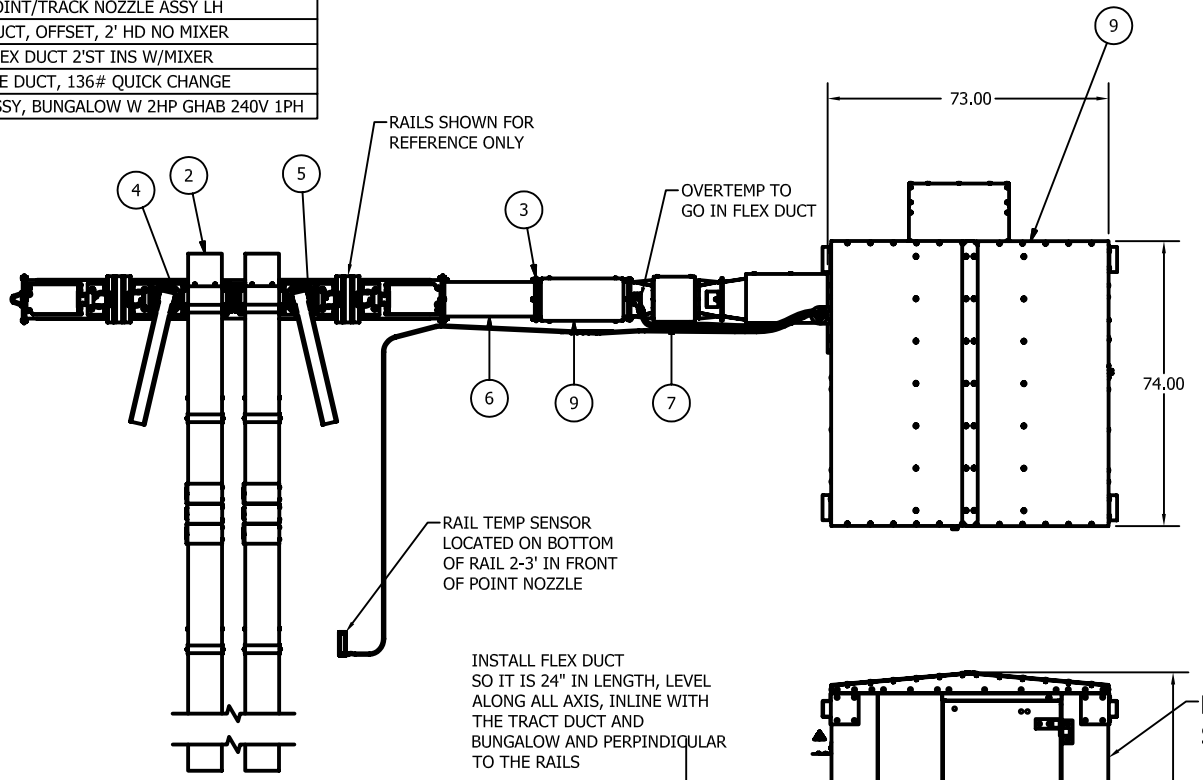

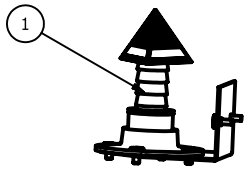

SNOW DETECTOR
NOT TO SCALE

UNLESS OTHERWISE SPECIFIED: DIMENSIONS ARE IN INCHES
TOLERANCES
DECIMALS .X ± 0.035 .XX ± 0.010 .XXX ± 0.005
ANGULAR ± 0.5
FRACTIONS ± 1/32
DO NOT SCALE DRAWING

DRAWN: EJS
DATE: 08/02/2010
MATL: N / A
BEND ALLOWANCE: N / A

RAILWAY EQUIPMENT CO.
MINNEAPOLIS, MINNESOTA (763) 972-2200

TITLE: BUNGALOW, GHAB 2HP 240V
40' TRACK DUCT
(ASSEMBLY / B. O. M.)

DWG NO: 960N36964
REV: K
SCALE: 1 : 25
DWG SIZE: B
SHEET 1 OF 2

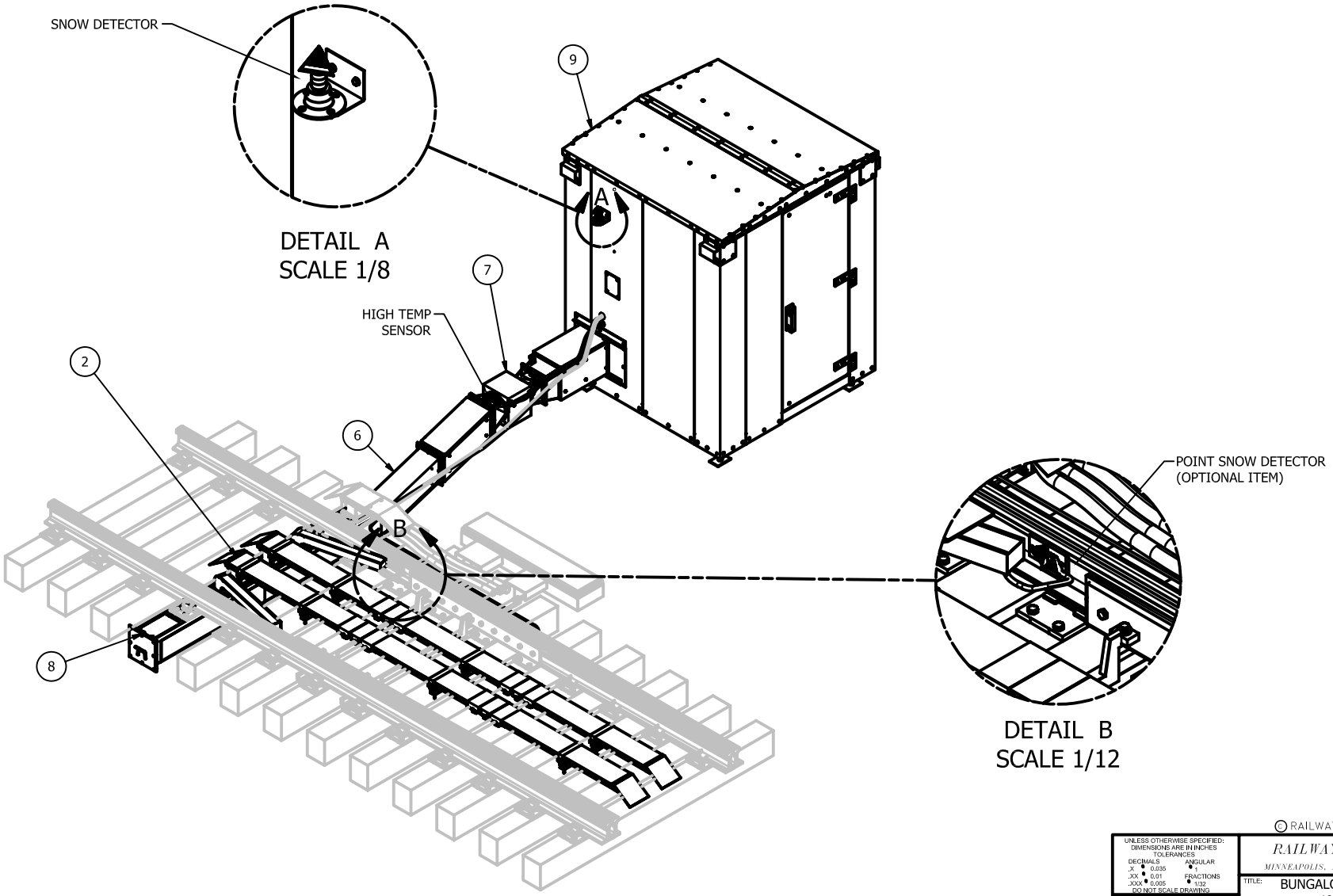

UNLESS OTHERWISE SPECIFIED:
DIMENSIONS ARE IN INCHES
TOLERANCES
DECIMALS
.X ± 0.035
.XX ± 0.01
.XXX ± 0.005
ANGULAR
± 1°
FRACTIONS
± 1/32
DO NOT SCALE DRAWING

DRAWN: GJONAS

DATE: 06/27/11

MATL: NA

BEND ALLOWANCE:
NA

RAILWAY EQUIPMENT CO.
MINNEAPOLIS, MINNESOTA (763) 972-2200

TITLE: BUNGALOW, GHAB 2HP 240V
40' TRACK DUCT

DWG NO: 960N36964

REV: K

SCALE:

DWG SIZE: B

SHEET 2 OF 2

SYM.	E.C.O.	BY	REVISION DESCRIPTION	DATE	APPROVED
A	---	RF	NEW PART	11/20/01	---
B	04-0028	RF	NEW TRACK DUCT SPLICE	06/06/05	---

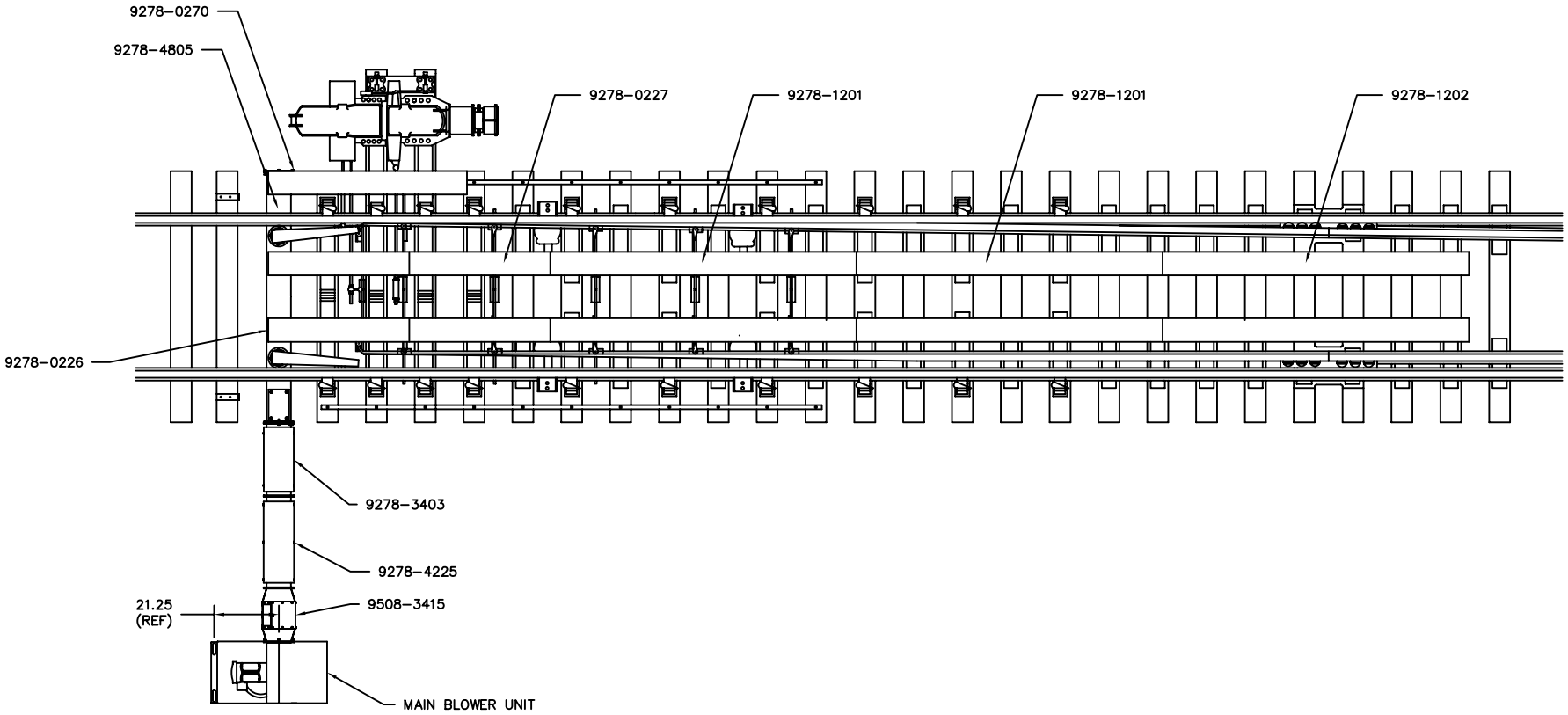

UNLESS OTHERWISE SPECIFIED:
DIMENSIONS ARE IN INCHES
TOLERANCES
DECIMALS ANGULAR
.X ± .035 ± 0.5°
.XX ± .010 FRACTIONS
.XXX ± .005 ± 1/32
DO NOT SCALE DRAWING

DRAWN TB/RF

DATE 10/23/00

MATERIAL N/A

DIE & BEND ALLOWANCE N/A

RAILWAY EQUIPMENT CO.
DELANO, MINNESOTA (763) 972-2200

TITLE
HOT AIR BLOWER
SWITCH LAYOUT
--

DWG NO. 9509-0020 REV B

SCALE N/A DRAWING SIZE B SHEET 1 OF 1

PARTS LIST

ITEM	PART NUMBER	REV	UOM	QTY	DESCRIPTION
1	26003	C	EA	1	INLET CONE, BLOWER
2	26006	E	EA	1	ASSY, BLOWER WHEEL
3	28035	-	EA	6	MOUNT, RUBBER, M/M 1/4-20
4	28107	-	EA	1	NUT, 1/4-20, THUMB, NYLON
5	2831411112	-	EA	1	SCREW, #10-32 X 3/4 PAN SLT
6	2831851112	-	EA	4	BOLT, 3/8-16 X 3/4 HEX HEAD
7	2831851120	-	EA	8	BOLT, 3/8-16 X 1-1/4 HEX HEAD
8	2831861112	-	EA	8	BOLT, 3/8-16 X 3/4 CARRIAGE
9	2832-4101	-	EA	2	NUT, #10-32 HEX
10	2832-5101	-	EA	12	NUT, 1/4-20 HEX
11	2832-5901	-	EA	10	NUT, 1/4-20 CENTERLOCK
12	2832-8904	-	EA	16	NUT, 3/8-16 CENTERLOCK
13	2833-4210	-	EA	1	WASHER, #10 SPLIT LOCK
14	2833-4310	-	EA	2	WASHER, #10 EXT. STAR
15	2833-5110	-	EA	6	WASHER, 1/4 FLAT
16	2833-5119	-	EA	4	WASHER, 1/4 X 1.5 FENDER
17	2833-5211	-	EA	6	WASHER, 1/4 SPLIT LOCK
18	2833-8040	-	EA	4	RIVET, BUTTON HEAD PLATED STL
19	2833-8210	-	EA	4	WASHER, 3/8 SPLIT LOCK
20	2890-0307	-	EA	1	BUSHING, 7/8
21	29051	-	EA	51	BOLT, 1/4-20 X 1/2 WITH 1/2 HD
22	32009	-	SHT	1	INSULATION, STYROFOAM
23	60002	-	EA	2	3/8 ROMEX
24	60169	-	EA	2	TY-RAP, 0.30 X 8
25	60185	A	FT	8	GASKET, 0.25 X 0.75 ADHESIVE BACK
26	6093-0100	-	EA	5	TY-RAP, 4IN 0.10 WIDTH
27	61000	A	EA	1	U-BOLT, MRO BOLT #05
28	61001	-	EA	1	ELBOW, 3/4IN SCH 40 BLACK
29	61017	-	EA	1	NIPPLE, 3/4 X 7 SCH 40 BLACK
30	8040-0950	E	EA	1	NAMEPLATE, 950/951 GHAB
31	9278-3122	D	EA	1	DUCT, ADAPTOR, 11X12 TO 8X8
32	93358	A	EA	1	GASKET, 8 X 8 LIFT-OUT DUCT
33	933603	A	EA	1	BLOWER SHROUD
34	9338-0026	A	EA	1	ASSY, BUZZER
35	9338-9028	B	EA	1	ASSY, WIRED MOTOR 2HP 230V 1PH
36	95046	A	EA	1	MOTOR MOUNTING PLATE, HAB
37	9508-0038	A	EA	1	ASSY, GAS SENSOR EXT CABLE
38	9508-0039	A	EA	1	ASSY, DUCT SENSOR EXT CABLE
39	9508-0135	C	EA	1	BURNER, 6" VERTICAL
40	9508-0150	B	EA	1	ASSY, GHAB CONTROL 2HP 1PH 240
41	9508-0430	A	EA	1	ASSY, WIRED IGNITION XFMER
42	9508-0431	B	EA	1	ASSY, HARNESS AIR FLOW SWITCH
43	9508-0495	A	EA	1	ASSY, FLAME WIRE
44	960131	A	EA	1	ENCLOSURE, HAB
45	96018	A	EA	1	COVER, UPPER INTAKE, GALV
46	96019	B	EA	1	2HP BASE, HAB, GALV. BUNGALOW
47	96020	B	EA	1	INTAKE BODY, 2HP BUNGALOW
48	960431	A	EA	1	SUPPORT, GAS LINE, 2ND STAGE
49	960600	A	EA	1	BLOWER OUTLET FLANGE
50	960602	C	EA	1	MOTOR MOUNTING PLATE BUNGALOW
51	9608-0023	C	EA	1	ASSEMBLY, IGNITION WIRE
52	9608-0138	B	EA	1	GHAB GAS PIPING W PRESS SENSOR
53	960801	A	EA	1	BUNGALOW ENCL MOUNTING PLATE
54	R8039-0816	A	EA	1	LABEL, FAN ROTATION
55	R8039-0830	A	EA	1	LABEL, GHAB WARNINGS
56	R8039-0955	A	EA	1	LABEL, ID PLATE AGA/CSA
57	R9500-0100	A	EA	1	LABEL, GHAB MENU
58	R9600-0103	B	EA	2	MANUAL, 960 BUNGALOW SNO-NET

REVISION HISTORY

REV	ECO #	DESCRIPTION	DATE	BY
A	06-0032	NEW ASSEMBLY	1/18/07	RMJ
B	08-0006	UPDATED TRAN/ENCL/PANEL	6/23/08	WS
C	10-0031	CHANGED ENCL/XFMR/BASE	12/16/10	MF
K	11-0014	UPDATED GHAB CONTROL	06/28/11	GJ

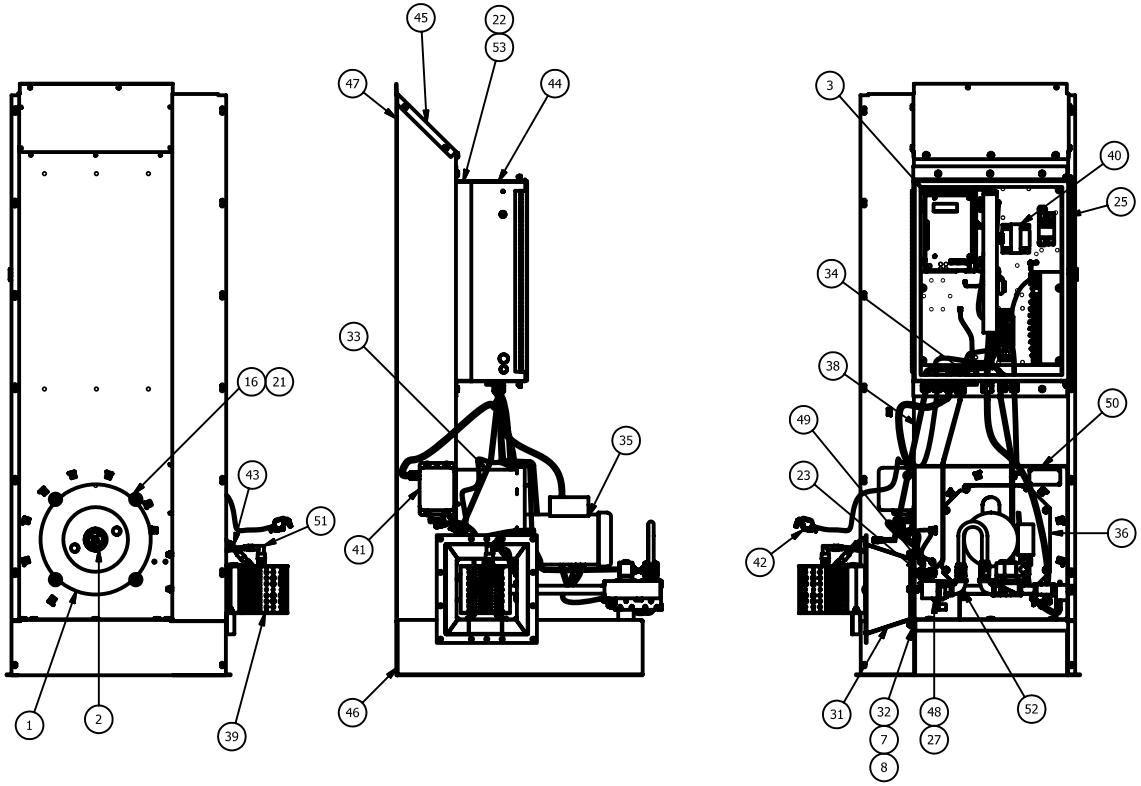

UNLESS OTHERWISE SPECIFIED: DIMENSIONS ARE IN INCHES
TOLERANCES
DECIMALS .X ± 0.035 .XX ± 0.010 .XXX ± 0.005
ANGULAR ± 1°
FRACTIONS ± 1/32
DO NOT SCALE DRAWING

RAILWAY EQUIPMENT CO.
MINNEAPOLIS, MINNESOTA (763) 972-2200

TITLE: ASSY, MAIN 2 HP GHAB

ASSY/BOM

DRAWN: MF
DATE: 12/16/10
MATL: N/A
BEND ALLOWANCE: N/A
DWG NO: 9508-6117
REV: K
SCALE: 1/16
DWG SIZE: B
SHEET 1 OF 1

Parts List					
ITEM	PART NUMBER	REV	UOM	QTY	DESCRIPTION
1	927279	A	EA	1	ASSY, TUBE TIE DUCT 8 X 10
2	927237	A	EA	2	COVER PLATE, TEMP SENSOR
3	2831951121	-	EA	16	BOLT, 1/2-13 X 1.25 SS
4	2833-9009	-	EA	8	WASHER, 3/4 SPLIT LOCK
5	2833-8210	-	EA	4	WASHER, 3/8 SPLIT LOCK
6	2831851114	-	EA	4	BOLT, 3/8-16 X 1 HEX HEAD, SS
7	28121	-	EA	8	BOLT, 3/4-10 X 1 1/2 HEX SS
8	93358	A	EA	2	GASKET, 8 X 8 LIFT-OUT DUCT
9	927267	A	EA	2	COVER PLATE WITH LIFTING LUG
10	2831851116	-	EA	12	BOLT, 3/8-16 X 1 HEX CAP
11	2832-8904	-	EA	12	NUT, 3/8-16 CENTERLOCK
12	927366	A	EA	4	E-CLIP INSULATOR

Parts List					
ITEM	PART NUMBER	REV	UOM	QTY	DESCRIPTION
13	927248	A	EA	4	RAIL CLIP, TIE DUCT
14	927603	A	EA	2	COVER, OUTSIDE TRACK NOZZLE
15	927355	B	EA	2	TIE PLATE 136# E-CLIP-PAD TYPE
16	927367	B	EA	2	PAD FOR E-CLIP RUBBER 136# TIE
17	14151	-	EA	1	WIRE BURLAPBAG CLOSING TIES 6"
18	R8039-0901	D	EA	2	CAUTION LABEL, TIE DUCT 136#
19	R8039-0911	D	EA	1	TAG, ACCESS PARTS FOR TIE DUCT
20	14150	-	EA	1	BAG, BURLAP 10" X 14" 10OZ
21	12425	-	IN	720	TAP ROLL 2" WIDE HEAVY
22	2833-9020	-	EA	16	WASHER, M12 SPLIT LOCK
23	927602	A	EA	2	COVER, POINT/TRACK NOZZLE

REVISION HISTORY				
REV	ECO	DESCRIPTION	DATE	BY
A	06-0024	NEW PART	10/23/2006	WS

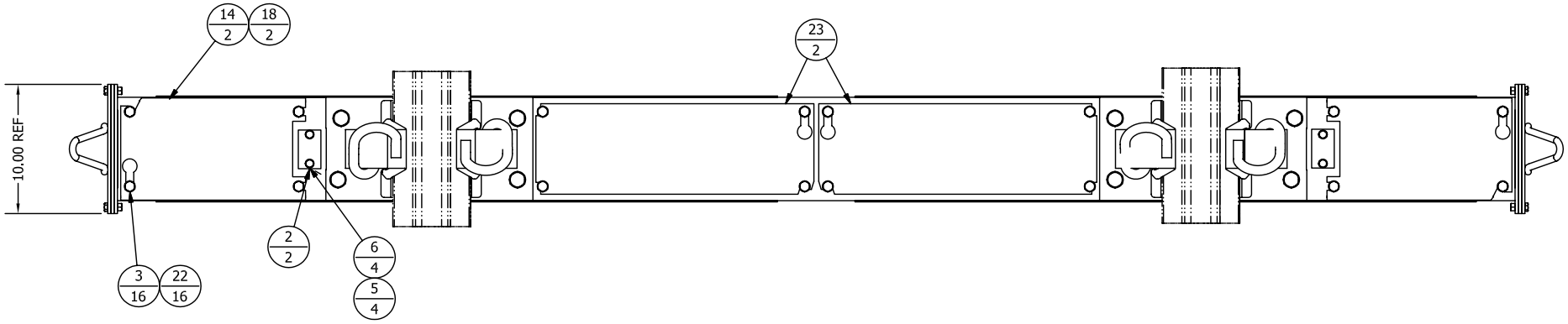

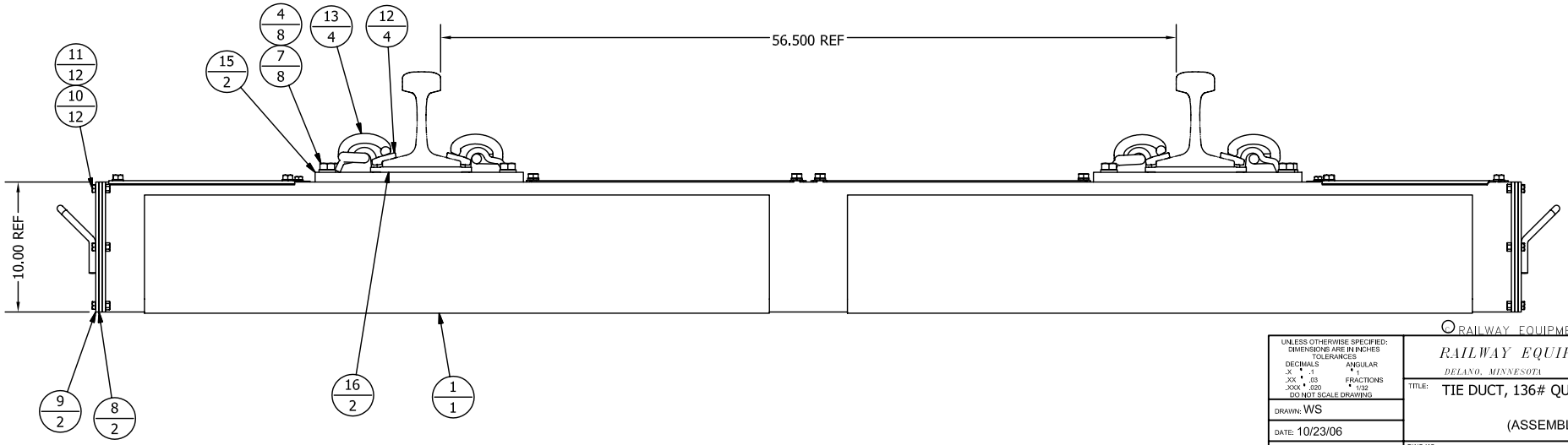

UNLESS OTHERWISE SPECIFIED:
DIMENSIONS ARE IN INCHES
TOLERANCES
DECIMALS .X ± .1 .XX ± .03 .XXX ± .020
ANGULAR ± 1°
FRACTIONS ± 1/32
DO NOT SCALE DRAWING

RAILWAY EQUIPMENT CO.
DELANO, MINNESOTA (763) 972-2200

TITLE: TIE DUCT, 136# QUICK CHANGE

(ASSEMBLY)

DRAWN: WS

DATE: 10/23/06

MAT'L: SEE B.O.M.

BEND ALLOWANCE: N/A

DWG NO: 9278-4805

REV: A

SCALE: 1/8

DWG SIZE: B

SHEET 1 OF 1

Parts List						Parts List					
ITEM	PART NUMBER	REV	UOM	QTY	DESCRIPTION	ITEM	PART NUMBER	REV	UOM	QTY	DESCRIPTION
1	927279	A	EA	1	ASSY, TUBE TIE DUCT 8 X 10	13	927368	A	EA	2	PAD FOR E-CLIP RUBBER 115# TIE
2	927356	B	EA	2	TIE PLATE 115# E-CLIP PAD TYPE	14	927366	A	EA	4	E-CLIP INSULATOR
3	927237	A	EA	2	COVER PLATE, TEMP SENSOR	15	927248	A	EA	4	RAIL CLIP, TIE DUCT
4	2831951121	"	EA	16	BOLT, 1/2-13 X 1.25 SS	16	927603	A	EA	2	COVER, OUTSIDE TRACK NOZZLE
5	2833-9009	"	EA	8	WASHER, 3/4 SPLIT LOCK	17	2833-9020	"	EA	16	WASHER, M12 SPLIT LOCK
6	2833-8210	"	EA	4	WASHER, 3/8 SPLIT LOCK	18	927603	A	EA	2	COVER, OUTSIDE TRACK NOZZLE
7	2831851114	"	EA	4	BOLT, 3/8-16 X 1 HEX HEAD, SS	19	14151	"	EA	1	WIRE BURLAPBAG CLOSING TIES 6"
8	28121	"	EA	8	BOLT, 3/4-10 X 1 1/2 HEX SS	20	R8039-0900	D	EA	2	CAUTION LABEL, TIE DUCT 115#
9	93358	A	EA	2	GASKET, LIFTOUT DUCT	21	R8039-0910	D	EA	1	TAG, ACCESS PARTS FOR TIE DUCT
10	927267	A	EA	2	COVER PLATE WITH LIFTING LUG	22	14150	"	EA	1	BAG, BURLAP 10" X 14" 10OZ
11	2831851116	"	EA	12	BOLT, 3/8-16 X 1 HEX CAP	23	12425	"	IN	720	TAPE ROLL 2" WIDE HEAVY
12	2832-8904	"	EA	12	NUT, 3/8-16 CENTERLOCK	24	927602	A	EA	2	COVER, POINT/TRACK NOZZLE

REVISION HISTORY				
REV	ECO	DESCRIPTION	DATE	BY
A	06-0024	NEW PART	10/17/2006	WS

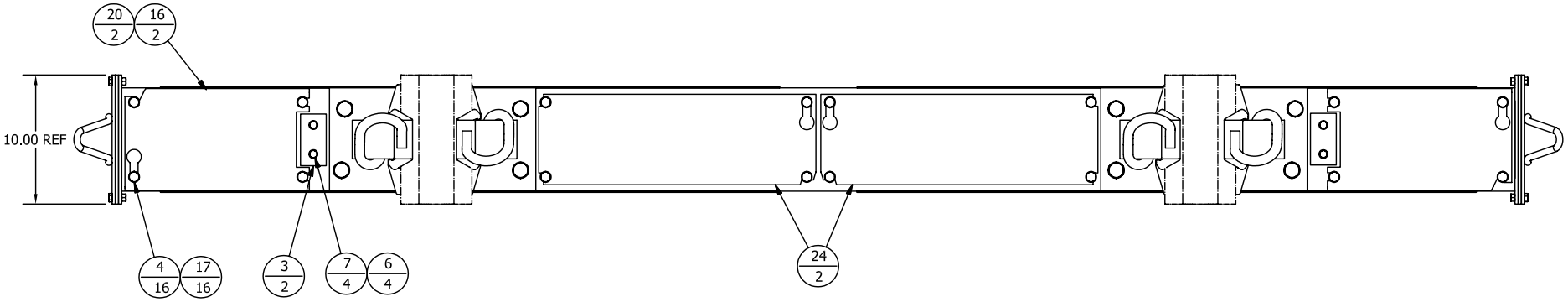

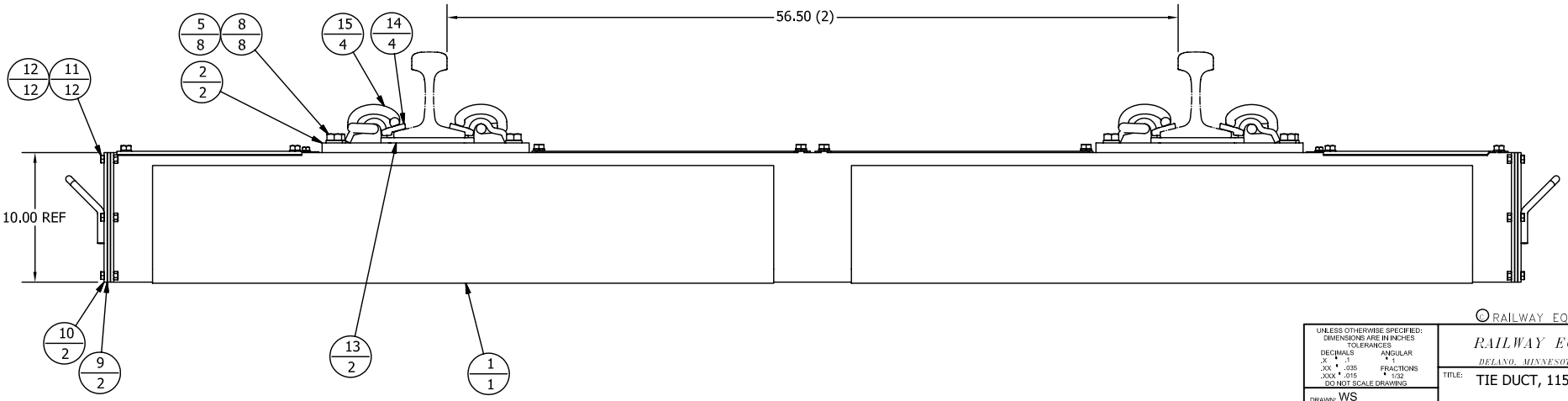

UNLESS OTHERWISE SPECIFIED:
DIMENSIONS ARE IN INCHES
TOLERANCES
DECIMALS ANGULAR
.X ± .1 ± 1
.XX ± .035 FRACTIONS
.XXX ± .015 ± 1/32
DO NOT SCALE DRAWING

RAILWAY EQUIPMENT CO.
DELANO, MINNESOTA (763) 972-2200

TITLE: TIE DUCT, 115# QUICK CHANGE

(ASSEMBLY)

DRAWN: WS

DATE: 10/17/06

MATL: SEE B.O.M.

BEND ALLOWANCE: N/A

DWG NO: 9278-4605

REV: A

SCALE: 1/8

DWG SIZE: B

SHEET 1 OF 1

Parts List					
ITEM	PART NUMBER	REV	UOM	QTY	DESCRIPTION
1	927600	B	EA	1	POINT/TD NOZZLE MOUNT PLATE RH
2	927701	A	EA	1	SCREEN, POINT NOZZLE
3	927702	A	EA	1	SCREEN TRACK DUCT NOZZLE LARGE
4	92757	D	EA	1	GASKET, ISO, PT NOZZLE RED
5	92759	B	EA	1	GASKET, ISO, TR NOZZLE RED
6	93617	D	EA	1	POINT NOZZLE, 4 X 4 GALV
7	2833-9015	B	EA	8	WASHER, ISOLATING NOZZLE
8	28106	-	EA	8	SPACER, .38X.625X.375 ROUND
9	2833-9014	-	EA	4	WASHER, 5/8 FLAT SAE
10	2833-8110	-	EA	8	WASHER, 3/8 FLAT
11	2833-8210	-	EA	8	WASHER, 3/8 SPLIT LOCK
12	2832-8101	-	EA	8	NUT, 3/8-16 HEX
14	R9508-4000	A	EA	1	LABEL, QUICK NOZZLE ASSY RH
15	927490	A	EA	1	NOZZLE, TRACK DUCT ASSY

REVISION HISTORY				
REV	ECO	DESCRIPTION	DATE	BY
A	06-0024	NEW PART	10/24/2006	WS

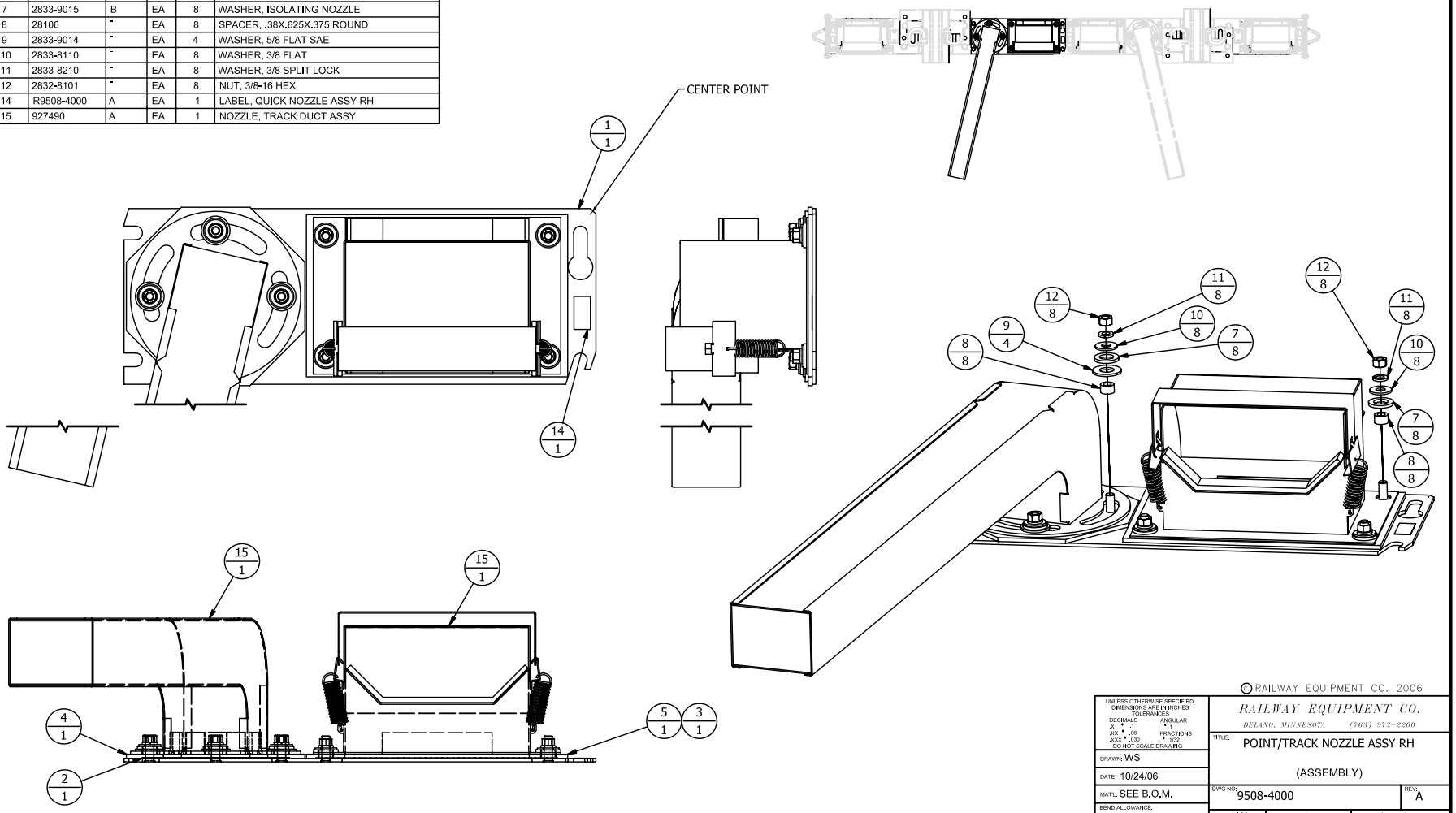

UNLESS OTHERWISE SPECIFIED: DIMENSIONS ARE IN INCHES
TOLERANCES:
DECIMALS X ± .1 XX ± .06 XXX ± .030
ANGULAR ± 1°
FRACTIONS ± 1/32
DO NOT SCALE DRAWING

RAILWAY EQUIPMENT CO.
DELANO, MINNESOTA (763) 972-2200

TITLE: POINT/TRACK NOZZLE ASSY RH

(ASSEMBLY)

DRAWN: WS
DATE: 10/24/06
MAT'L: SEE B.O.M.
BEND ALLOWANCE: N/A
DWG NO: 9508-4000
REV: A
SCALE: 1/4
DWG SIZE: B
SHEET 1 OF 1

Parts LIst					
ITEM	PART NUMBER	REV	UOM	QTY	DESCRIPTION
1	927606	B	EA	1	POINT/TD NOZZLE MOUNT PLATE LH
2	927701	A	EA	1	SCREEN, POINT NOZZLE
3	927702	A	EA	1	SCREEN TRACK DUCT NOZZLE LARGE
4	92757	D	EA	1	GASKET, ISO, PT NOZZLE RED
5	92759	B	EA	1	GASKET, ISO, TR NOZZLE RED
6	93617	D	EA	1	POINT NOZZLE, 4 X 4 GALV
7	2833-9015	B	EA	8	WASHER, ISOLATING NOZZLE
8	28106	"	EA	8	SPACER, .38X.625X.375 ROUND
9	2833-9014	"	EA	4	WASHER, 5/8 FLAT SAE
10	2833-8110	"	EA	8	WASHER, 3/8 FLAT
11	2833-8210	"	EA	8	WASHER, 3/8 SPLIT LOCK
12	2832-8101	"	EA	8	NUT, 3/8-16 HEX NUT
13	60195	"	FT	1.667	GASKET, .25 X 1.0 ADHESIVE BK
14	R9508-4001	A	EA	1	LABEL, QUICK NOZZLE ASSY LH
15	927490	A	EA	1	NOZZLE, TRACK DUCT ASSY

REVISION HISTORY				
REV	ECO	DESCRIPTION	DATE	BY
A	06-0024	NEW PART	10/19/2006	WS

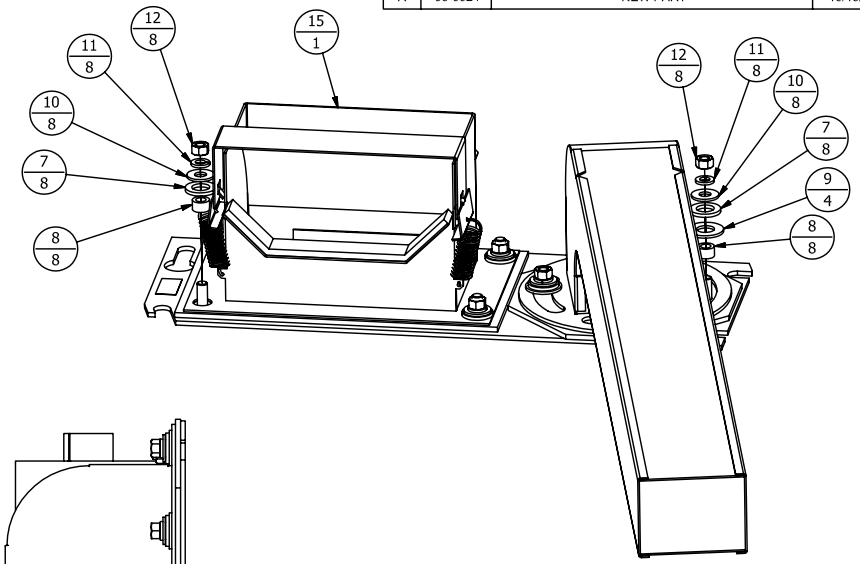

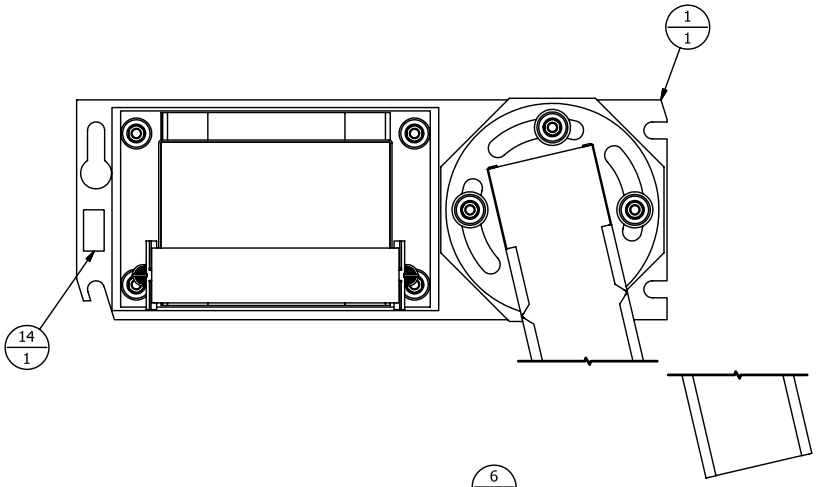

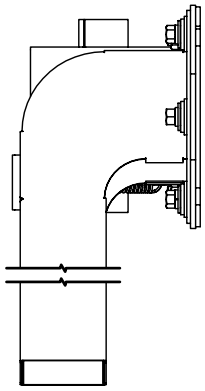

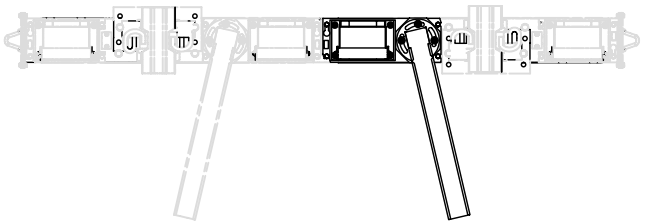

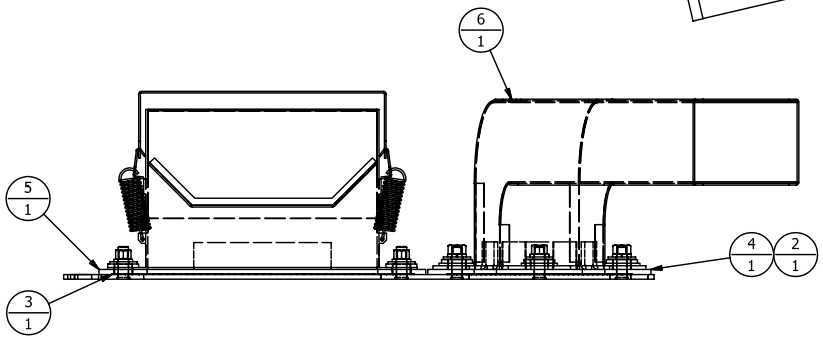

UNLESS OTHERWISE SPECIFIED:
DIMENSIONS ARE IN INCHES
TOLERANCES
DECIMALS .X ± .1 .XX ± .06 .XXX ± .030
ANGULAR ± 1°
FRACTIONS ± 1/32
DO NOT SCALE DRAWING

DRAWN: WS

DATE: 10/19/06

MATL: SEE B.O.M.

BEND ALLOWANCE: N/A

RAILWAY EQUIPMENT CO.
DELANO, MINNESOTA (763) 972-2200

TITLE: POINT/TRACK NOZZLE ASSY LH

(ASSEMBLY)

DWG NO: 9508-4001

REV: A

SCALE: 1/4 DWG SIZE: B SHEET 1 OF 1

Parts List					
ITEM	PART NUMBER			QTY	DESCRIPTION
1	927488	A	EA	1	NOZZLE, TRACK DUCT, NO DAMPER
2	92745	A	EA	1	HOLDDOWN STRAP, T. DUCT
5	92742	"	EA	2	SPRING, TRACK DUCT SUPPORT
4	92743	B	EA	2	CLIP, HOLDDOWN SPRING
7	60195	"	FT	1.67	GASKET, .25 X 1.0 ADHESIVE BK

REVISION HISTORY				
REV	ECO	DESCRIPTION	DATE	BY
A	06-0028	NEW PART	11/30/2006	RMJ

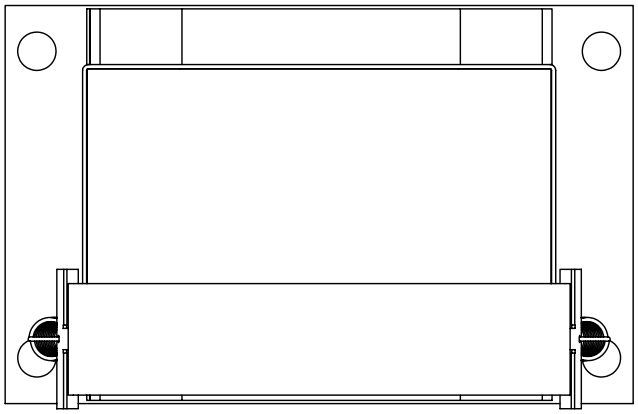

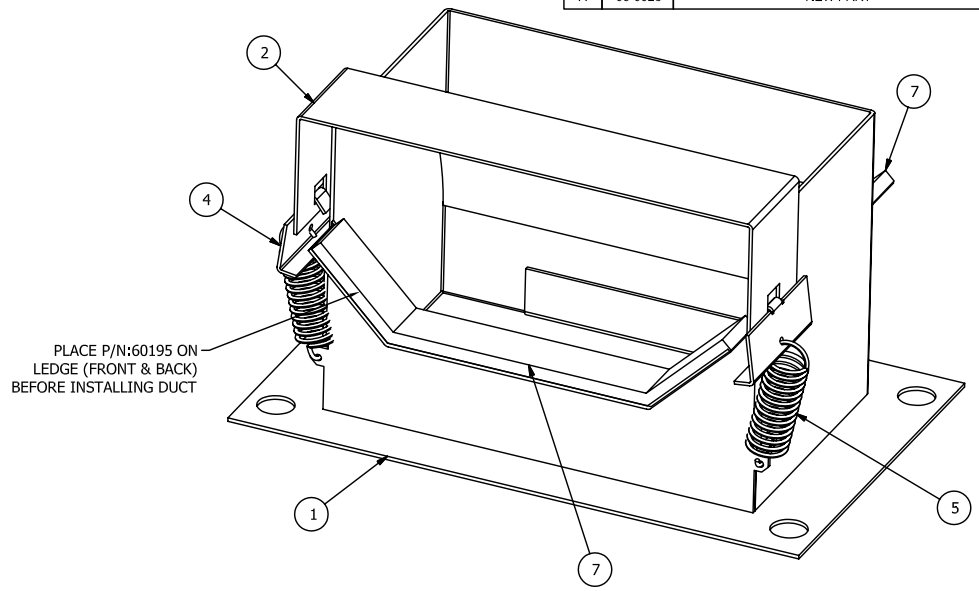

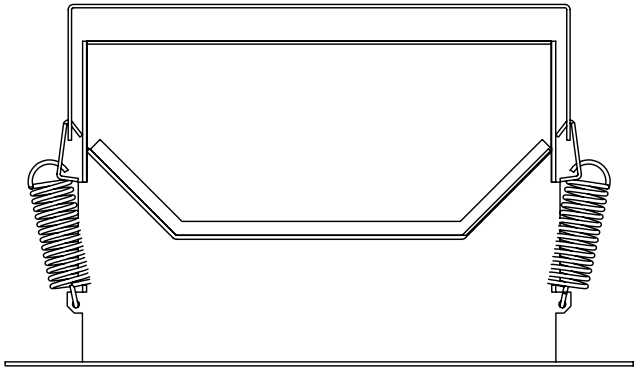

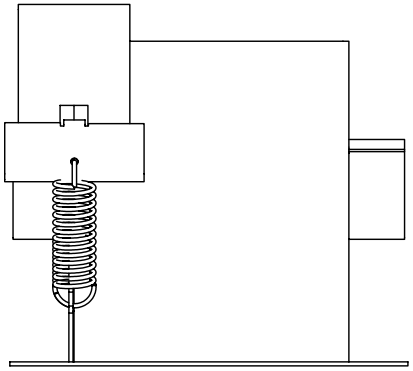

PLACE P/N:60195 UNDER
STRAP FOR
TRANSPORTATION.

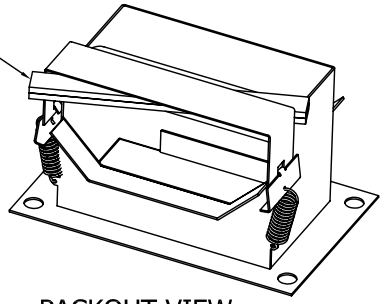

PACKOUT VIEW
SCALE 1 / 4

UNLESS OTHERWISE SPECIFIED:
DIMENSIONS ARE IN INCHES
TOLERANCES
DECIMALS .X ± 0.1 .XX ± 0.02 .XXX ± 0.01
ANGULAR ± 1
FRACTIONS ± 1/32
DO NOT SCALE DRAWING

RAILWAY EQUIPMENT CO.
DELANO, MINNESOTA (763) 972-2200

TITLE: NOZZLE, TRACK DUCT ASSY

DRAWN: RMJ

DATE: 11/30/06

MATL: N/A

BEND ALLOWANCE: N/A

DWG NO: 927490

REV: A

SCALE: 1/2 DWG SIZE: B SHEET 1 OF 1

ITEM NO.	PART NO.	UOM	QTY	DESCRIPTION
1	2831851114	EA	4	BOLT, HEX HD 3/8-16 x 1" SS
2	2833-8110	EA	4	WASHER, PLAIN 3/8"
3	2833-9015B	EA	4	WASHER, INSULATOR
4	28106	EA	4	SPACER, ROUND, .38 X .625 X .375
5	92757D	EA	1	GASKET, POINT NOZZLE
6	2833-9014	EA	4	WASHER, 5/8 FLAT PLATED
7	14046	EA	1	BAG, ZIPTOP 9x12 4mil
8	2833-8210	EA	4	WASHER, SPLIT LOCK 3/8"
9	927701A	EA	1	SCREEN, POINT NOZZLE

SYM.	E.C.O.	BY	REVISION DESCRIPTION	DATE	APPROVED
B	---	TB	ADD 927701	10/19/00	---
C	06-0028	RJ	CORNERS CUT OFF ON DUCT	11/29/06	---

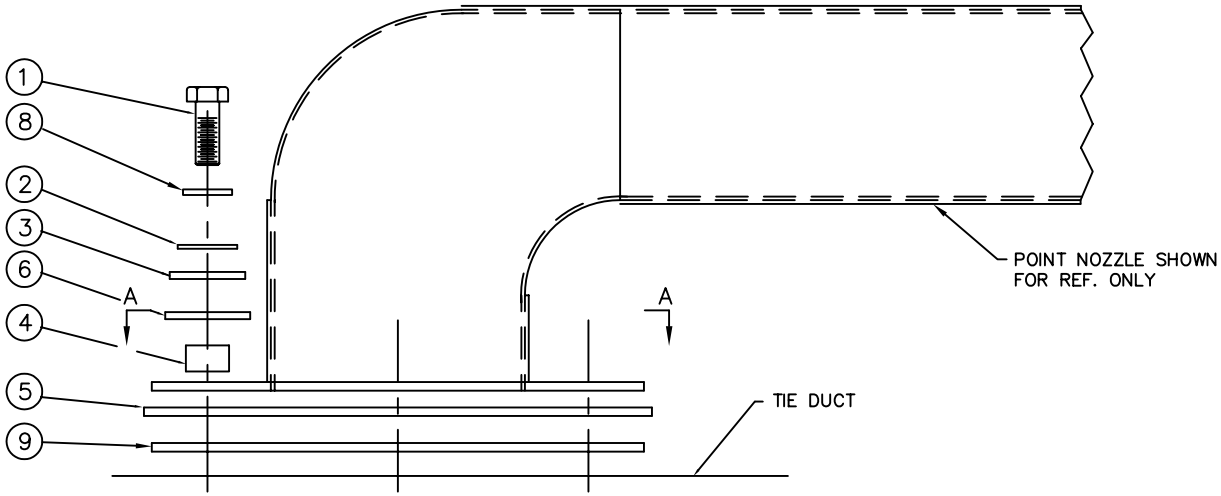

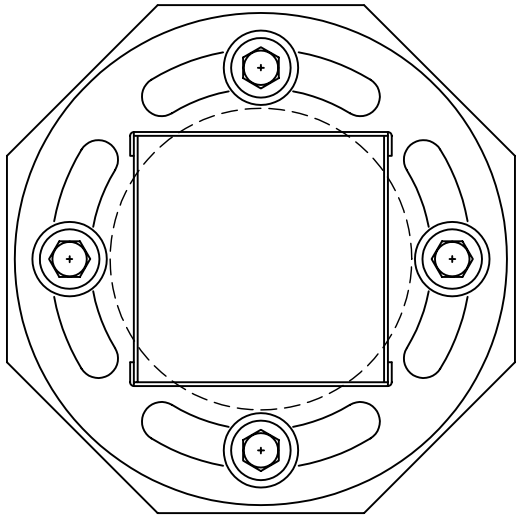

SECTION A-A

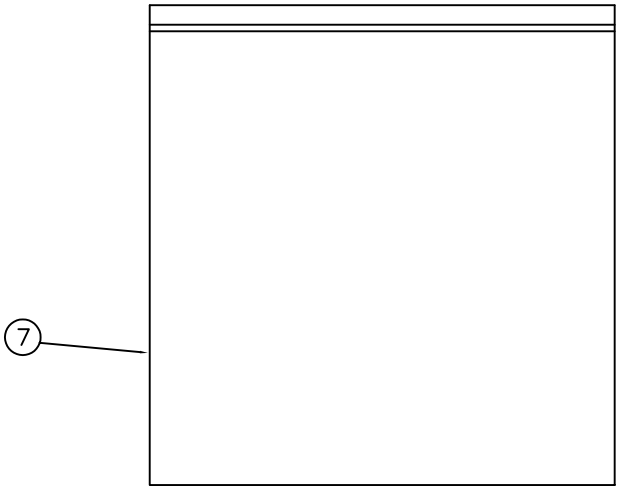

UNLESS OTHERWISE SPECIFIED: DIMENSIONS ARE IN INCHES
TOLERANCES
DECIMALS .X ± .035 .XX ± .010 .XXX ± .005
ANGULAR ± 0.5°
FRACTIONS ± 1/32
DO NOT SCALE DRAWING

DRAWN EFK

DATE 04/11/97

MATERIAL N/A

BEND ALLOWANCE N/A

RAILWAY EQUIPMENT CO.
DELANO, MINNESOTA (763) 972-2200

TITLE
ISOLATION KIT ASSEMBLY
POINT NOZZLE
TIE DUCT

DWG NO. 9278-0021 REV C

SCALE 1/4 DRAWING SIZE B SHEET 1 OF 1

ITEM NO.	PART NO.	UOM	QTY	DESCRIPTION
1	2831851114	EA	4	BOLT, HEX 3/8-16 x 1" SS
2	2833-8110	EA	4	WASHER, PLAIN 3/8"
3	2833-9015	EA	4	WASHER, INSULATOR
4	28106	EA	4	SPACER, ROUND, .38 X .625 X .375
5	92759	EA	1	GASKET, TRACK DUCT NOZZLE
6	60195	FT	1.67	GASKET, ADHESIVE .25 x 1"
7	14045	EA	1	BAG, ZIPTOP 12 x 15 4mil
8	2833-8210	EA	4	WASHER, SPLIT LOCK 3/8"
9	927702	EA	1	SCREEN, TRACK DUCT NOZZLE

REVISIONS					
REV.	E.C.O.	BY	REVISION DESCRIPTION	DATE	APPROVED
A	00-0005	TB	NEW PART	12.29.00	

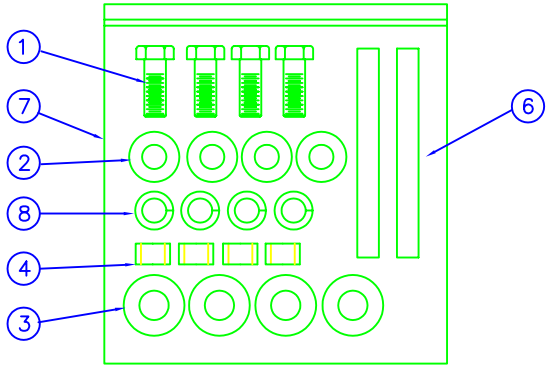

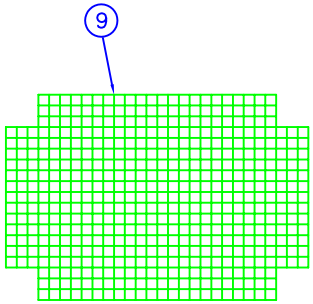

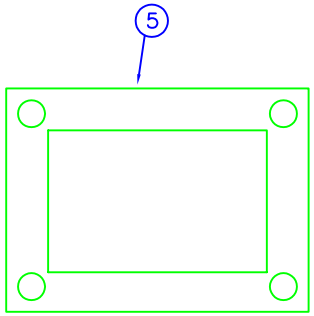

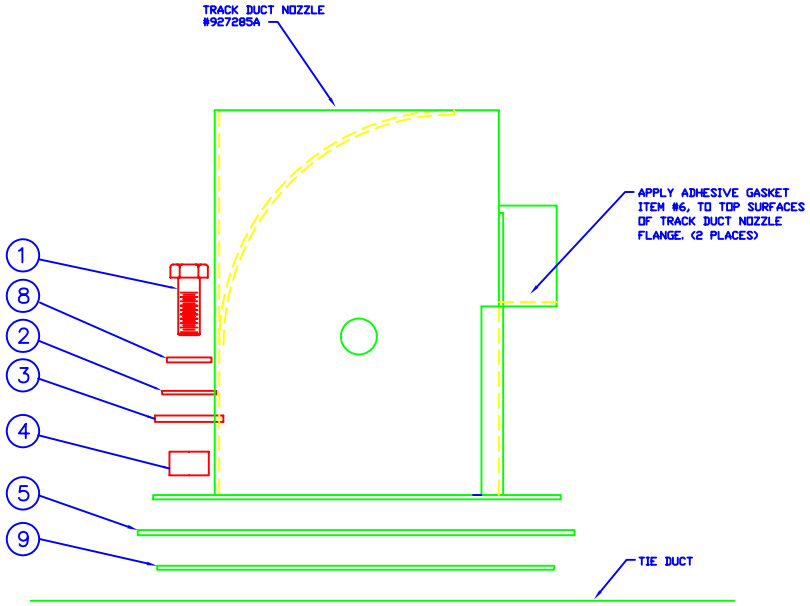

FORMED HOLES
"F" INDICATES FORMED INTO DRAWING
"F" INDICATES FORMED UP FROM DRAWING
REF.CONNECTED NO.
REF.CONNECTION DIA.
END NO.
MADE FROM

UNLESS OTHERWISE SPECIFIED
ALL EDGES ARE 90°
ALL EDGES HAVE BRL RADIUS
DIMENSIONS ARE IN INCHES
TOLERANCE ON
FRACTIONS ± 1/32
DECIMALS .XX ±.030 .XXX ±.010 .XXXX ±.005
ANGLES ± 1/2°
MATERIAL
FINISH

DRAWN BY	T. BUHL	DATE 12.19.00
CHECKED BY		DATE
APPROVED BY		DATE
SHEET 1 OF 1		

RAILWAY EQUIPMENT CO.
BELLAVIA, MINNESOTA (763) 972-2300

TITLE
ASS'Y, ISO KIT
TRACK NOZZLE
TIE DUCT

DWG NO. 9278-0027 REV. A

Parts List					
ITEM	PART NUMBER	REV	UOM	QTY	DESCRIPTION
1	14045	-	EA	1	BAG, 12 X 15 4MIL ZIPTOP
2	2831311104	-	EA	2	SCREW, #8-32 X 1/4 PAN SLT
3	2831411108	-	EA	2	SCREW, #10-32 X 1/2 PAN SLT
4	2831851120	-	EA	12	BOLT, 3/8-16 X 1-1/4 HEX HEAD
5	2832-8101	-	EA	12	NUT, 3/8-16 HEX
6	2833-8210	-	EA	12	WASHER, 3/8 SPLIT LOCK
7	29019	-	EA	12	BOLT, 1/4-20 X 1.3 SHOULDER
8	29051	-	EA	29	BOLT, 1/4-20 X 1/2 WITH 1/2 HD
9	32002	-	SQFT	12.5	INSULATION, FIBERGLASS
10	60002	-	EA	1	3/8 ROMEX
11	6093-0102	-	EA	2	TY-RAP
12	9338-0072	A	EA	1	ASSY, DUCT PRESSURE SENSOR
13	93533	D	EA	1	GASKET, 11X12, HIGH TEMP
14	950165	A	EA	1	PYREX VIEWING WINDOW BRACKET
15	950167	A	EA	1	GASKET, PYREX VIEWING WINDOW
16	950168	A	EA	1	PYREX VEIWING WINDOW
17	950178	A	EA	1	FLAME DUCT 11 X 12, BUNGALOW
18	9508-0032	C	EA	1	AIR FLOW SWITCH 950/951/960
19	950819	A	EA	1	QUICK ACCESS CVR W/WNDW
20	9528-0074	B	EA	1	GASKET KIT, 9X9 5HP DUCTWORK
21	952817	A	EA	1	PLATE, SAIL SWITCH & PRESSURE
22	960163	A	EA	1	INSUL BTM BUNGALOW, 11X12 DUCT
23	960164	A	EA	1	INSUL TOP, BUNG 11 X 12 DUCT

REVISION HISTORY				
RE	ECO #	DESCRIPTION	DATE	BY
			7/18/2011	

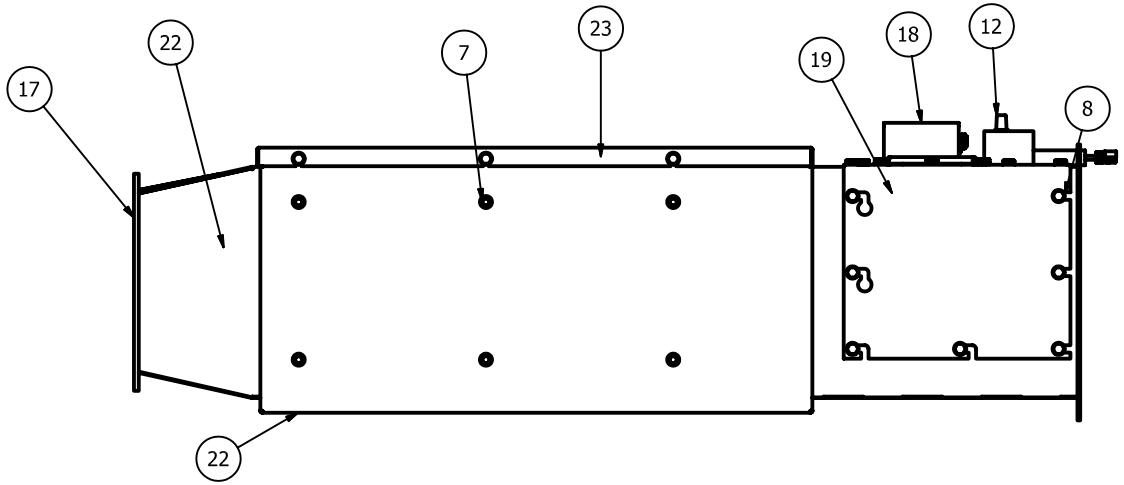

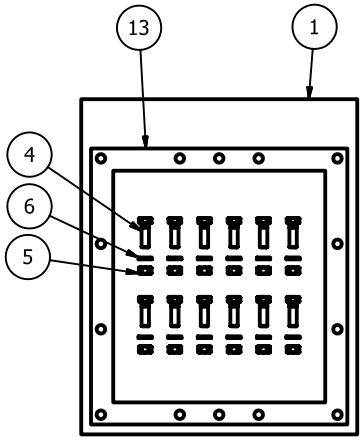

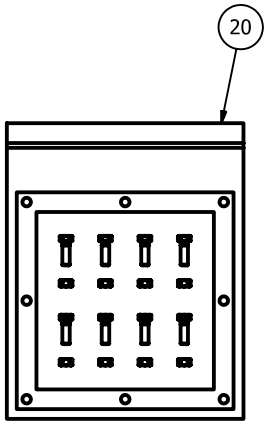

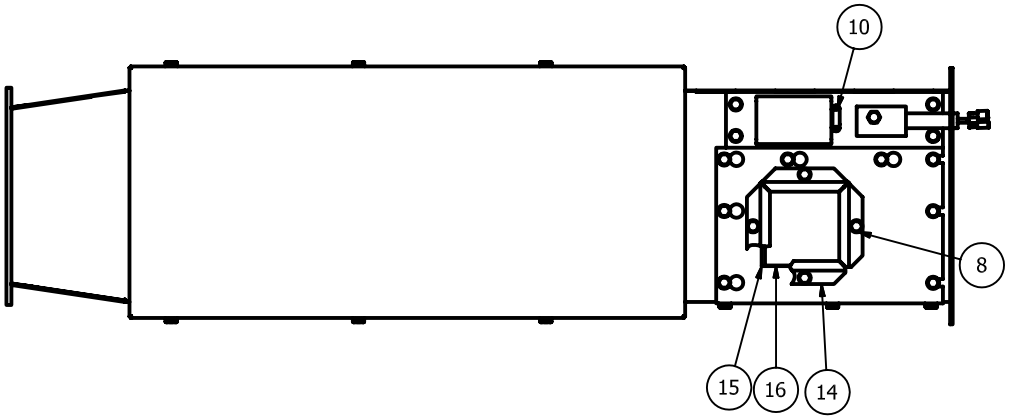

UNLESS OTHERWISE SPECIFIED:
DIMENSIONS ARE IN INCHES
TOLERANCES
DECIMALS .X ± 0.035 .XX ± 0.010 .XXX ± 0.005
ANGULAR ± 1
FRACTIONS ± 1/32
DO NOT SCALE DRAWING

DRAWN: GJONAS

DATE: 07/18/11

MAT'L:

BEND ALLOWANCE:

RAILWAY EQUIPMENT CO.
MINNEAPOLIS, MINNESOTA (763) 972-2200

TITLE: DUCT, FLAME 11X12 BUNGALOW

DWG NO: 9608-3126

REV: A

SCALE:

DWG SIZE: B

SHEET 1 OF 1

ITEM NO.	PART NO.	UOM	QTY	DESCRIPTION
1	952226	EA	1	INSUL COVER, OFFSET DUCT
2	29019	EA	8	SHOULDER BOLT 1/4–20 X 1.3
3	952224	EA	1	DUCT, OFFSET, WITH HEAVY BASE
4	32002	SQ.FT.	6	INSULATION FIBERGLASS
5	9528–0074	EA	1	GASKET KIT, 9X9 5HP FLEX
6	6093–0102	EA	1	TY–RAP

SYM.	E.C.O.	BY	REVISION DESCRIPTION	DATE	APPROVED
A	05–0008	RF	NEW PART	09/07/05	---
–	-- ---	--	---	---	---

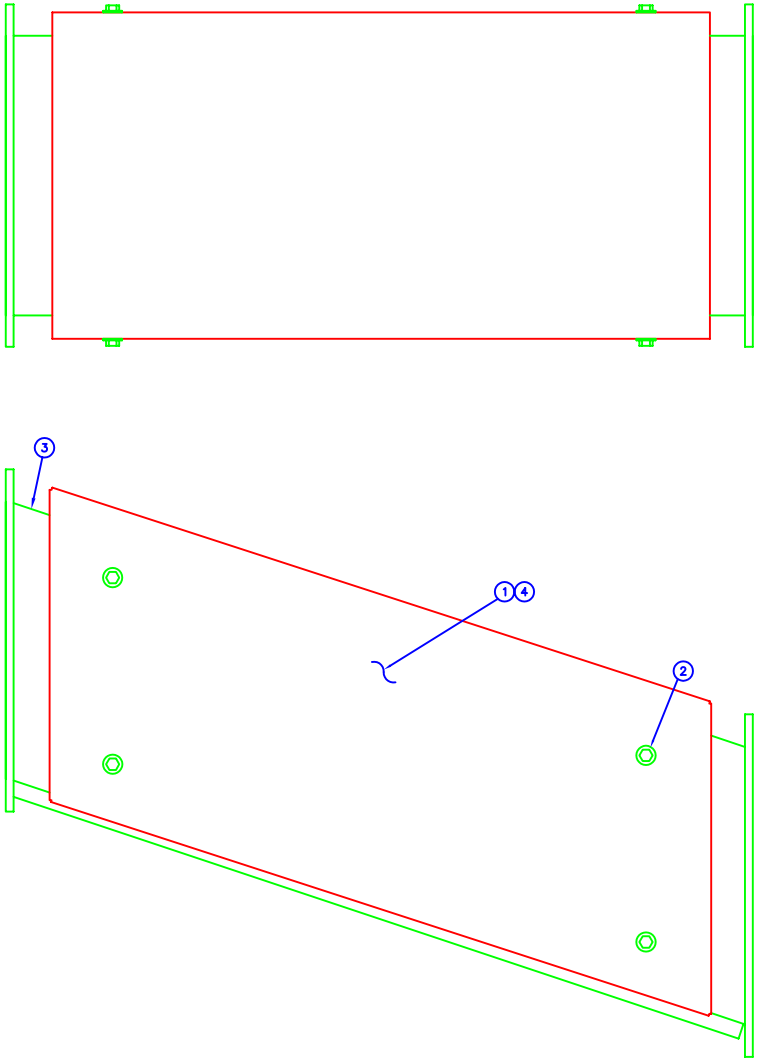

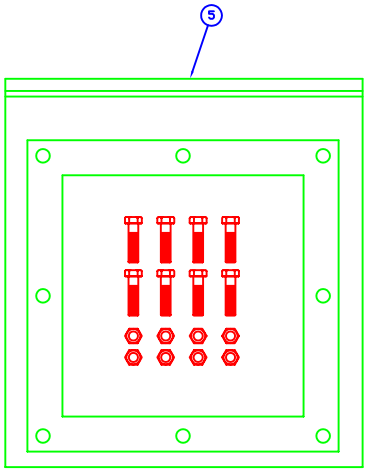

UNLESS OTHERWISE SPECIFIED:
DIMENSIONS ARE IN INCHES
TOLERANCES
DECIMALS .X ± .030 .XX ± .010 .XXX ± .005
ANGULAR ± 0.5°
FRACTIONS ± 1/32
DO NOT SCALE DRAWING

DRAWN RPF

DATE 09/07/05

MATERIAL N/A

BEND ALLOWANCE N/A

RAILWAY EQUIPMENT CO.
DELANO, MINNESOTA (763) 972–2200

TITLE
OFFSET DUCT, 2'
REINFORCED, LIFTOUT
ASSEMBLY / B.O.M.

DWG NO. 9528–3404

REV A

SCALE 1/4 DRAWING SIZE B SHEET 1 OF 1

PARTS LIST					
ITEM	PART NUMBER	REV	UOM	QTY	DESCRIPTION
1	952388	A	EA	1	FLEX WRAP, BOTTOM 2'
2	952389	A	EA	1	FLEX WRAP, BOTTOM 2'
3	29051	-	EA	6	BOLT, 1/4-20 X 1/2 HWH X 1/2 HD
4	952391	A	EA	1	FLEX DUCT, TRANSITION WELDMENT
5	952392	A	EA	1	FLEX DUCT, TRANSITION WELDMENT
6	952394	A	EA	1	RUBBER TUBE 10" ID 11" LONG
7	9528-0074	B	EA	1	GASKET KIT, 9X9 5HP DUCTWORK
8	927237	A	EA	1	COVER PLATE, TEMP SENSOR
9	28105	-	EA	2	CLAMP, HOSE SST 18 INCH
10	R9528-4222	A	EA	1	LABEL, FLEX DUCT TO BLOWER

REVISION HISTORY				
REV	ECO #	DESCRIPTION	DATE	BY
A	08-0003	NEW PART	6/23/10	ES

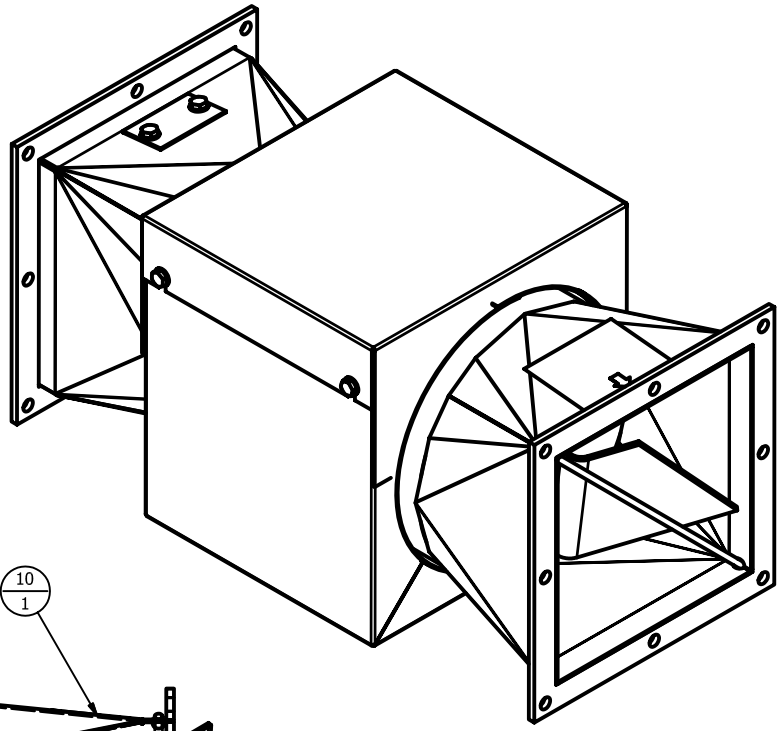

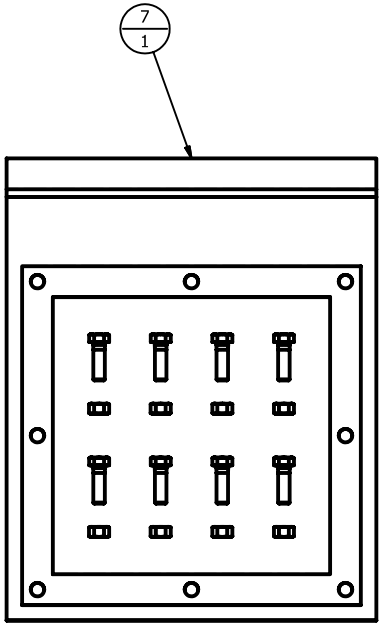

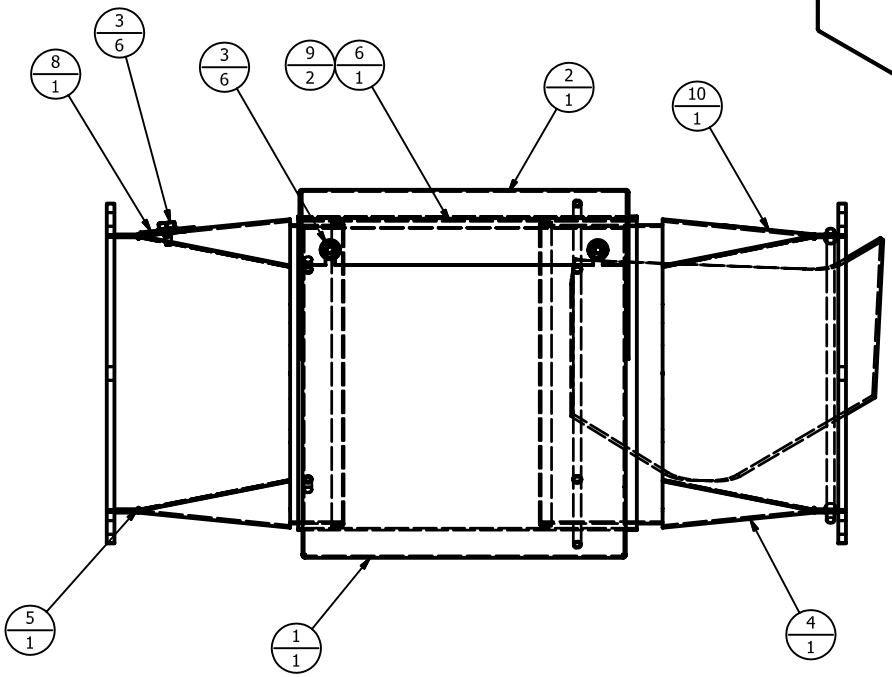

UNLESS OTHERWISE SPECIFIED:
DIMENSIONS ARE IN INCHES
TOLERANCES
DECIMALS .X ± 0.035 .XX ± 0.010 .XXX ± 0.005
ANGULAR ± 0.5
FRACTIONS ± 1/32
DO NOT SCALE DRAWING

DRAWN: EJS

DATE: 06/22/2010

MATL: SEE BOM

BEND ALLOWANCE: N / A

RAILWAY EQUIPMENT CO.
MINNEAPOLIS, MINNESOTA (763) 972-2200

TITLE: FLEX DUCT 2'ST INS W/MIXER
9 X 9 RED RUBBER
(ASSEMBLY / B. O. M.)

DWG NO: 9528-4222

REV: A

SCALE: 1 : 4

DWG SIZE: B

SHEET 1 OF 1

ITEM NO.	PART NO.	UOM	QTY	DESCRIPTION
1	927443	EA	1	TRACK DUCT BASE 5'
2	92740	EA	1	END PLATE, TRACK DUCT
3	92730	EA	1	TRACK DUCT COVER 5'
4	92774	EA	1	TRACK DUCT SUPPORT BRACKET
5	92785	EA	1	DEFLECTOR, TRACK DUCT, SMALL
6	29051	EA	9	BOLT, 1/4-20X1/2 W1/2" HEX HEAD
7	6093-0100	EA	1	TY-RAP, 4" .10 WIDTH

SYM.	E.C.O.	BY	REVISION DESCRIPTION	DATE	APPROVED
A	05-0017	RF	NEW SPLICE SYSTEM	05/24/05	---
B	05-0047	RO	NEW SUPPORT ASSEM DESIGN	10/27/05	---

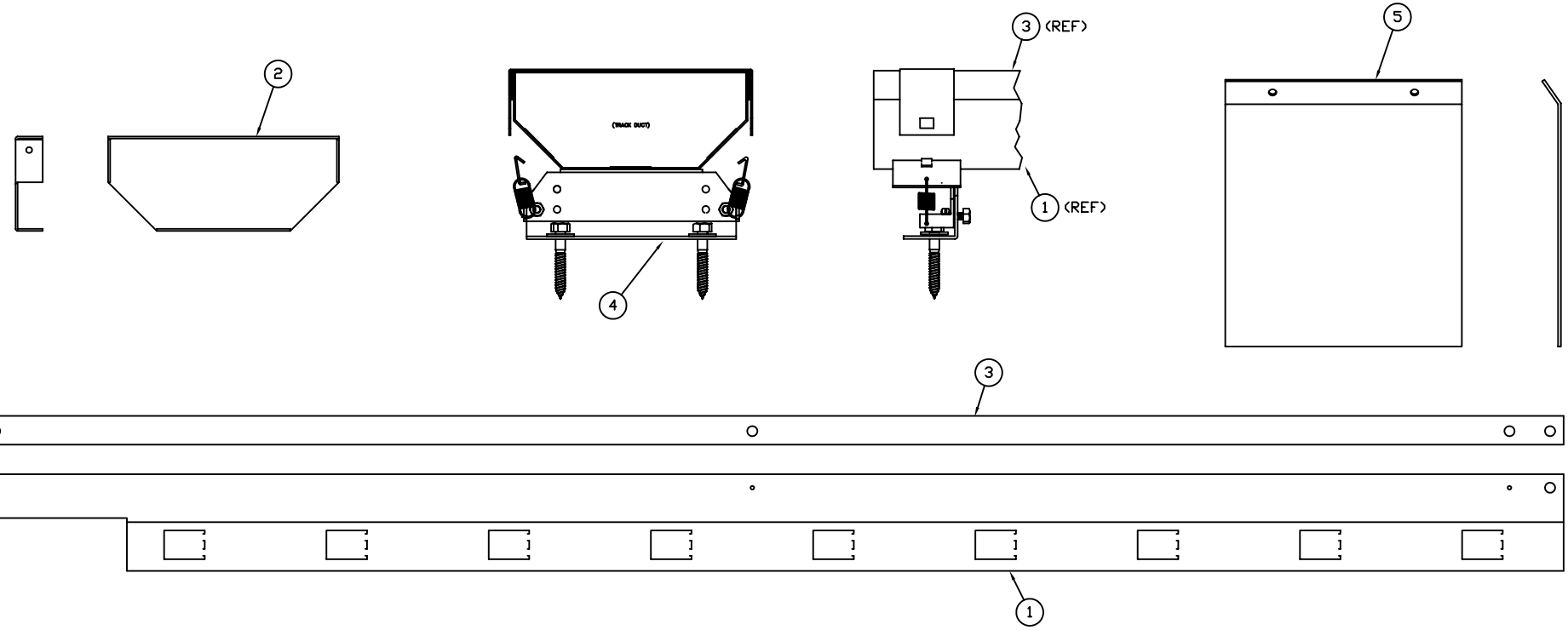

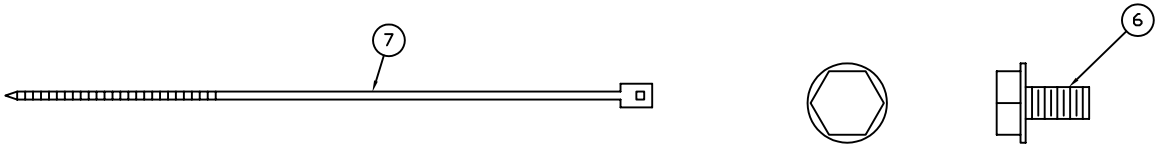

FULL SCALE

UNLESS OTHERWISE SPECIFIED: DIMENSIONS ARE IN INCHES
TOLERANCES
DECIMALS .X ± .035 .XX ± .010 .XXX ± .005
ANGULAR ± 0.5°
FRACTIONS ± 1/32
DO NOT SCALE DRAWING

DRAWN RPF

DATE 05/24/05

MATERIAL SEE PRINT

BEND ALLOWANCE N/A

RAILWAY EQUIPMENT CO.
DELANO, MINNESOTA (763) 972-2200

TITLE
TRACK DUCT
5' POINT LTD
ASSEMBLY / B.O.M.

DWG NO. 9278-0226

REV B

SCALE 1/4 DRAWING SIZE B SHEET 1 OF 1

ITEM NO.	PART NO.	UOM	QTY	DESCRIPTION
1	92735	EA	1	TRACK DUCT BASE 5'
2	92730	EA	1	TRACK DUCT COVER 5'
3	927441	EA	1	CENTER COVER, E.Z. SPLICE
4	927442	EA	2	END COVER, E.Z. SPLICE
5	927450	EA	1	BASE, E.Z. SPLICE
6	92774	EA	1	TRACK DUCT SUPPORT BRACKET
7	29051	EA	6	BOLT, 1/4-20X1/2 W1/2" HEX HEAD
8	6093-0100	EA	1	TY-RAP, 4" .10 WIDTH

SYM.	E.C.O.	BY	REVISION DESCRIPTION	DATE	APPROVED
A	05-0017	RF	NEW SPLICE SYSTEM	05/24/05	---
B	05-0047	RO	NEW SUPPORT ASSM DESIGN	10/27/05	---

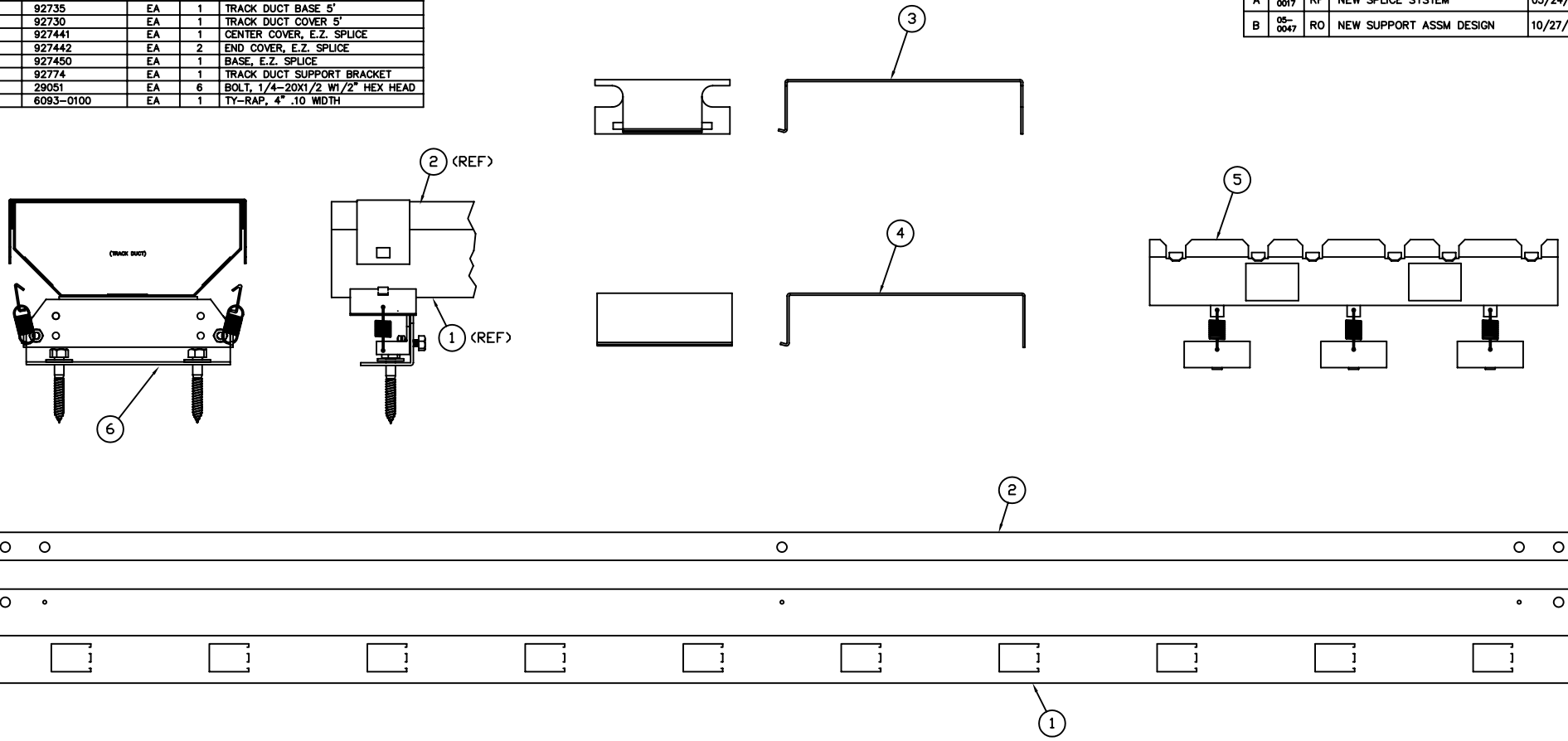

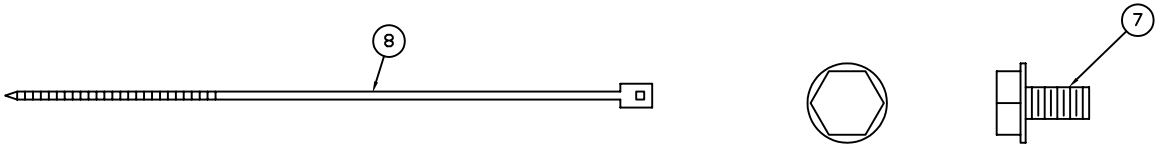

FULL SCALE

UNLESS OTHERWISE SPECIFIED: DIMENSIONS ARE IN INCHES
TOLERANCES
DECIMALS .X ± .035 .XX ± .010 .XXX ± .005
ANGULAR ± 0.5°
FRACTIONS ± 1/32
DO NOT SCALE DRAWING

DRAWN: RPF
DATE: 05/24/05
MATERIAL: SEE PRINT
DIE & BEND ALLOWANCE: N/A

RAILWAY EQUIPMENT CO.
DELANO, MINNESOTA (763) 972-2200

TITLE: TRACK DUCT 5' MID ASSEMBLY / B.O.M.

DWG NO. 9278-0227 REV B
SCALE 1/4 DRAWING SIZE B SHEET 1 OF 1

ITEM NO.	PART NO.	UOM	QTY	DESCRIPTION
1	927538	EA	1	TRACK DUCT BASE 10'
2	92741	EA	1	TRACK DUCT COVER 10'
3	927441	EA	1	CENTER COVER, E.Z. SPLICE
4	927442	EA	2	END COVER, E.Z. SPLICE
5	927450	EA	1	BASE, E.Z. SPLICE
6	92774	EA	1	TRACK DUCT SUPPORT BRACKET
7	29051	EA	6	BOLT, 1/4-20X1/2 W1/2" HEX HEAD
8	6093-0100	EA	1	TY-RAP, 4" .10 WIDTH

SYM.	E.C.O.	BY	REVISION DESCRIPTION	DATE	APPROVED
J	--- ---	TB	REMOVE 92744, 28080, 28081	05/26/99	---
K	02-0045	RF	REPLACE 29016 W/29051	08/29/02	---
L	05-0017	RF	NEW SPLICE SYSTEM	05/18/05	---
M	05-0047	RO	NEW SUPPORT ASSEM. DESIGN	10/27/05	---

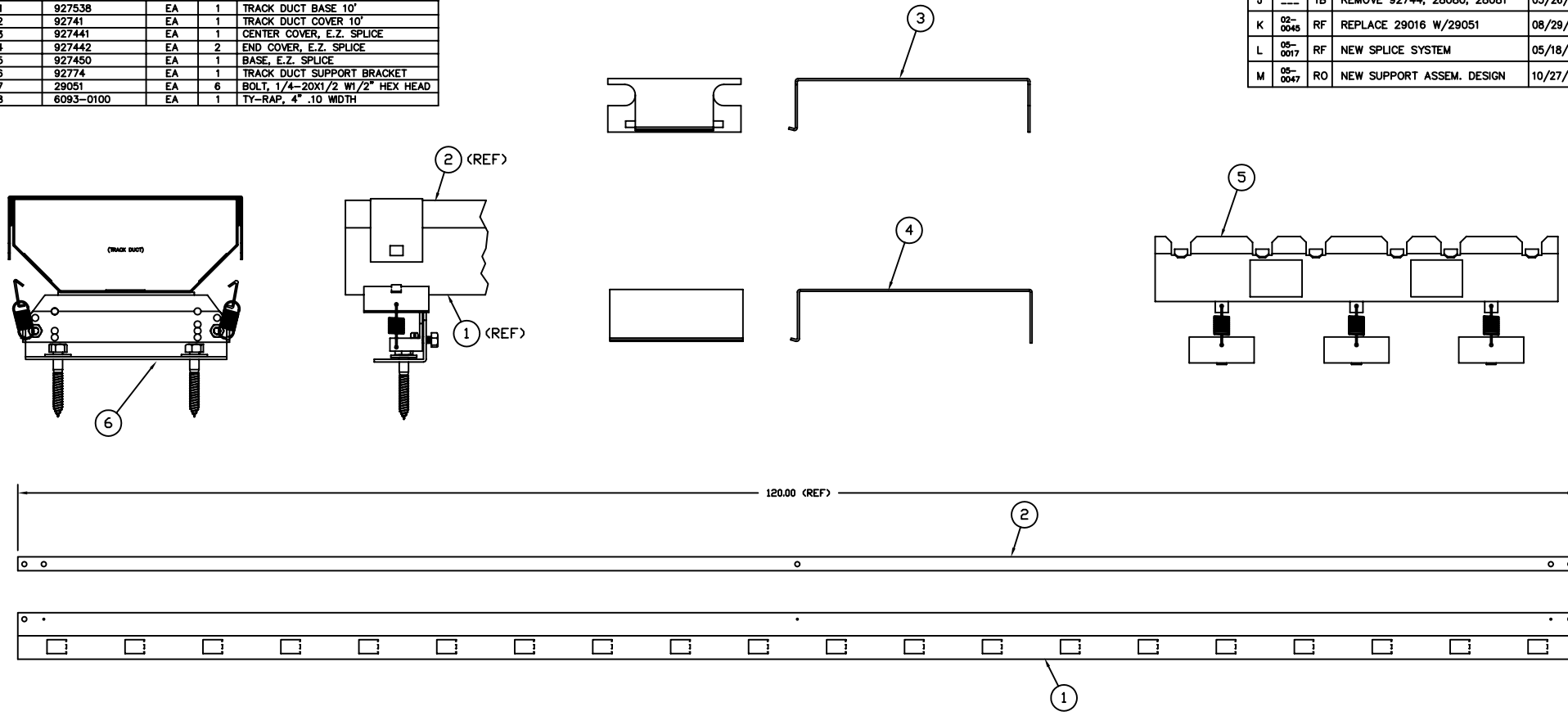

1/8 SCALE

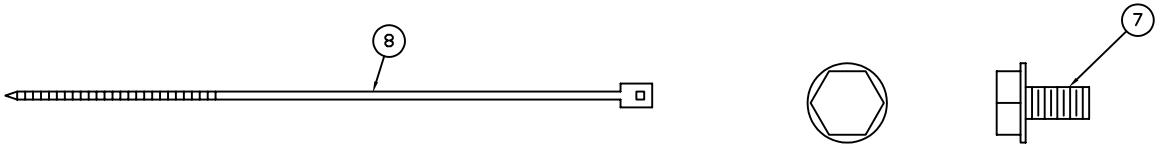

FULL SCALE

UNLESS OTHERWISE SPECIFIED: DIMENSIONS ARE IN INCHES
TOLERANCES
DECIMALS .X ± .035 .XX ± .010 .XXX ± .005
ANGULAR ± 0.5°
FRACTIONS ± 1/32
DO NOT SCALE DRAWING

DRAWN RPF

DATE 02/15/93

MATERIAL SEE PRINT

BE & BEND ALLOWANCE N/A

RAILWAY EQUIPMENT CO.
DELANO, MINNESOTA (763) 972-2200

TITLE
TRACK DUCT
10' MID
ASSEMBLY / B.O.M.

DWG NO. 9278-1201

REV M

SCALE 1/4 DRAWING SIZE B SHEET 1 OF 1

ITEM NO.	PART NO.	UOM	QTY	DESCRIPTION
1	927538	EA	1	TRACK DUCT BASE 10'
2	92740	EA	1	END PLATE, TRACK DUCT
3	92741	EA	1	TRACK DUCT COVER 10'
4	927441	EA	1	CENTER COVER, E.Z. SPLICE
5	927442	EA	2	END COVER, E.Z. SPLICE
6	927450	EA	1	BASE, E.Z. SPLICE
7	92774	EA	1	TRACK DUCT SUPPORT BRACKET
8	92785	EA	1	DEFLECTOR, TRACK DUCT, SMALL
9	29051	EA	9	BOLT, 1/4-20X1/2 W1/2" HEX HEAD
10	6093-0100	EA	1	TY-RAP, 4" .10 WIDTH

SYM.	E.C.O.	BY	REVISION DESCRIPTION	DATE	APPROVED
J	---	TB	UPDATE TRACK DUCT SUPPORT	05/26/99	---
K	02-0045	RF	REPLACE 29016 W/29051	08/29/02	---
L	05-0017	RF	NEW SPLICE SYSTEM	05/18/05	---
M	05-0047	RO	NEW SUPPORT ASSM DESIGN	10/27/05	---

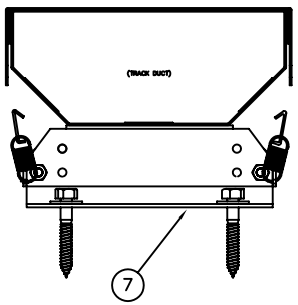

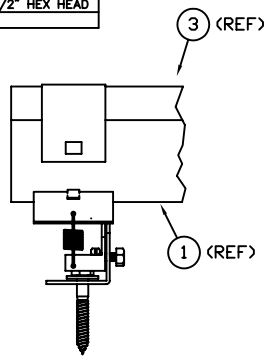

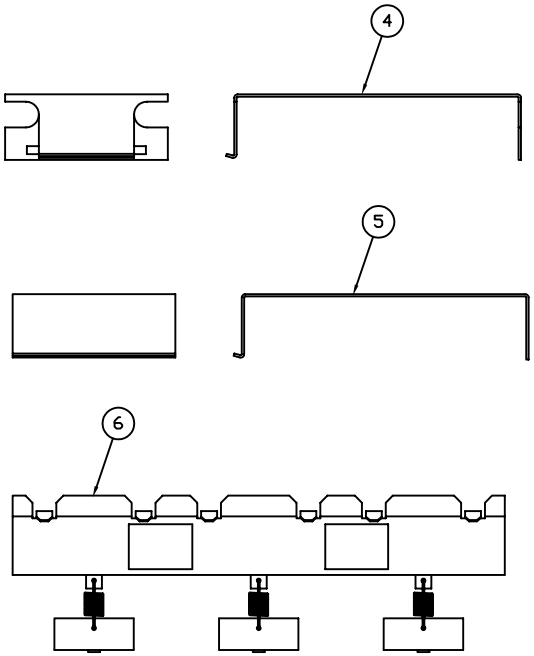

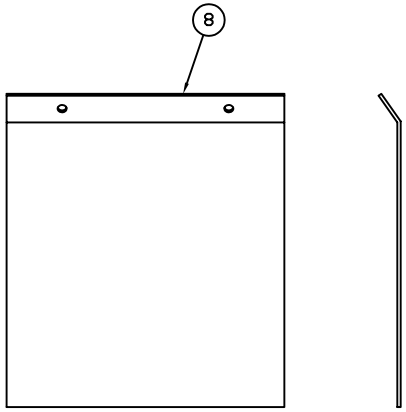

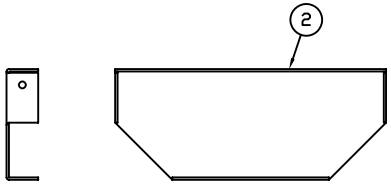

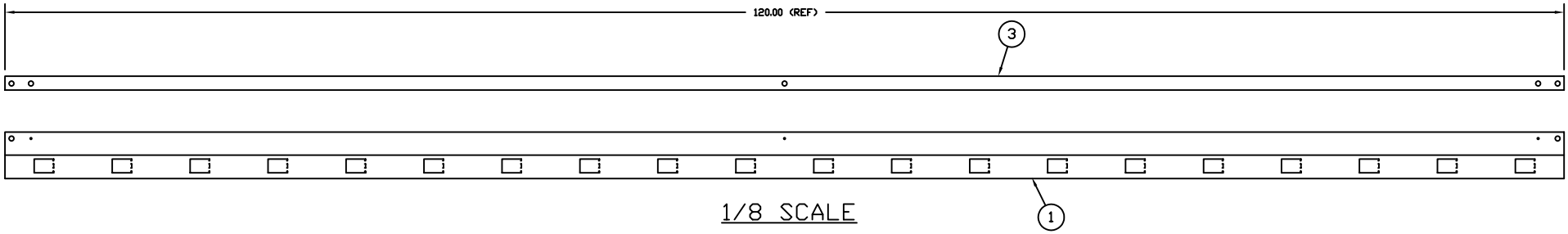

1/8 SCALE

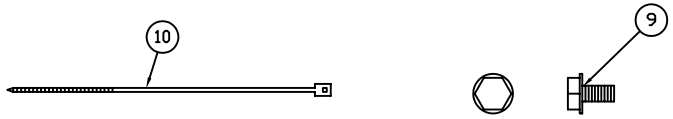

1/2 SCALE

UNLESS OTHERWISE SPECIFIED: DIMENSIONS ARE IN INCHES
TOLERANCES
DECIMALS .X ± .035 .XX ± .010 .XXX ± .005
ANGULAR ± 0.5°
FRACTIONS ± 1/32
DO NOT SCALE DRAWING

DRAWN RPF

DATE 02/15/93

MATERIAL SEE PRINT

DIE & BEND ALLOWANCE N/A

RAILWAY EQUIPMENT CO.
DELANO, MINNESOTA (763) 972-2200

TITLE
TRACK DUCT
10' HEEL
ASSEMBLY / B.O.M.

DWG NO. 9278-1202

REV M

SCALE 1/4 DRAWING SIZE B SHEET 1 OF 1

ITEM NO.	PART NO.	UOM	QTY	DESCRIPTION
1	9278–0207	EA	1	TRACK DUCT 7' HEEL
2	9278–0027	EA	1	ISO KIT, TR NOZZLE LARGE
3	927490	EA	1	NOZZLE, TRACK DUCT
4	41023	EA	1	BOX, TRACK DUCT KIT

SYM.	E.C.O.	BY	REVISION DESCRIPTION	DATE	APPROVED
A	02–0027	RF	NEW PART	07/03/02	---
B	03–0023	RF	UPDATE NOZZLE	07/29/03	---
C	05–0017	RF	NEW SPLICE DESIGN	05/25/05	---
D	05–0047	RO	NEW TRACK DUCT NOZZLE	11/10/05	---
E	06–0024	RJ	NEW TRACK DUCT NOZZLE	02/02/07	---

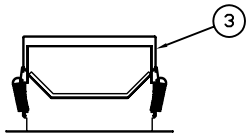

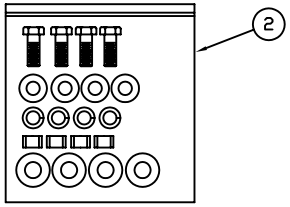

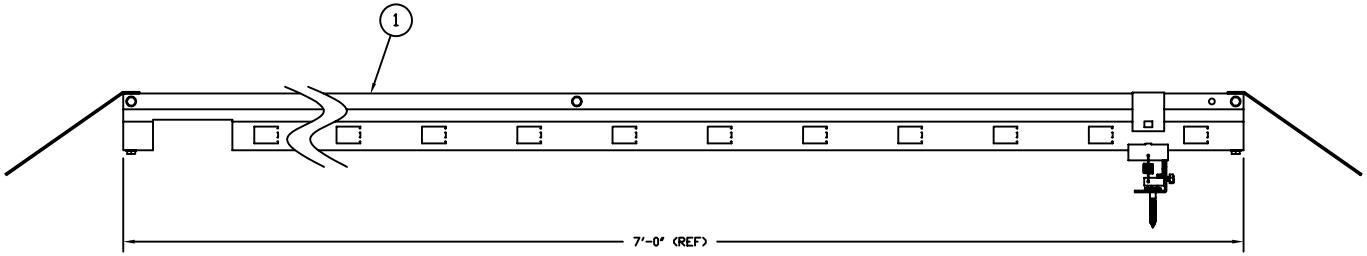

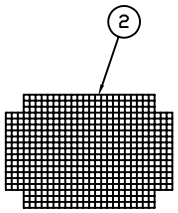

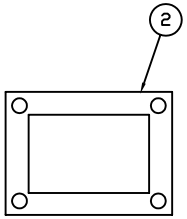

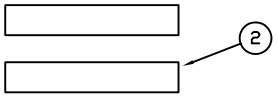

UNLESS OTHERWISE SPECIFIED:
DIMENSIONS ARE IN INCHES
TOLERANCES
DECIMALS ANGULAR
.X ± .035 ± 0.5°
.XX ± .010 FRACTIONS
.XXX ± .005 ± 1/32
DO NOT SCALE DRAWING

RAILWAY EQUIPMENT CO.
DELANO, MINNESOTA (763) 972–2200

TITLE
TRACK DUCT KIT, 7'
LARGE NOZZLE

DRAWN	RPF
DATE	07/03/02
MATERIAL	N/A
BEND ALLOWANCE	N/A
DWG NO.	9278–0270
REV	E
SCALE	N/A
DRAWING SIZE	B
SHEET	1 OF 1

ITEM NO.	PART NO.	UOM	QTY	DESCRIPTION
1	92745	EA	1	HOLDDOWN STRAP, TRACK DUCT
2	927550	EA	1	TRACK DUCT SUPPORT BASE
3	927551	EA	1	TRACK DUCT SPRING BRKT
4	92742	EA	2	SPRING, TRACK DUCT SUPPORT BRKT
5	92743	EA	2	SPRING CLIP, TRCK DUCT SUP.BRKT
6	2831551110	EA	2	1/4-20 X 5/8 HEX BOLT #5 HARD
7	2832-5901	EA	2	1/4-20 CENTERLOCK NUT
8	2833-8110	EA	2	3/8 FLAT WASHER
9	28045	EA	2	LAG BOLT 3/8 X 2.5
10	14042	EA	1	BAG, ZIPLOCK 4 x 6 x .002
11	14045	EA	1	BAG, ZIPLOCK 12 x 15 x .004

SYM.	E.C.O.	BY	REVISION DESCRIPTION	DATE	APPROVED
D		EFK	REDESIGN FOR SPRING MOUNT.	6/21/91	
E		EFK	CHG. P/N 927135 REV.B TO 927135 REV.C	9/25/92	
F		EFK	CHG. P/N 92742 REV.A TO 92742 REV.B	7/8/94	
G		TB	ADD ITEMS 10 THRU 15	5.26.99	
H	01-0019	TB	#92743B WAS 92743A	4.11.01	
J	05-0017	RF	NEW SPLICE SYSTEM	05/18/05	
K	05-0047	RO	SHORTENED 927550-551	10/27/05	

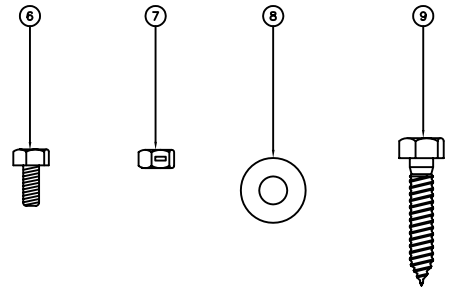

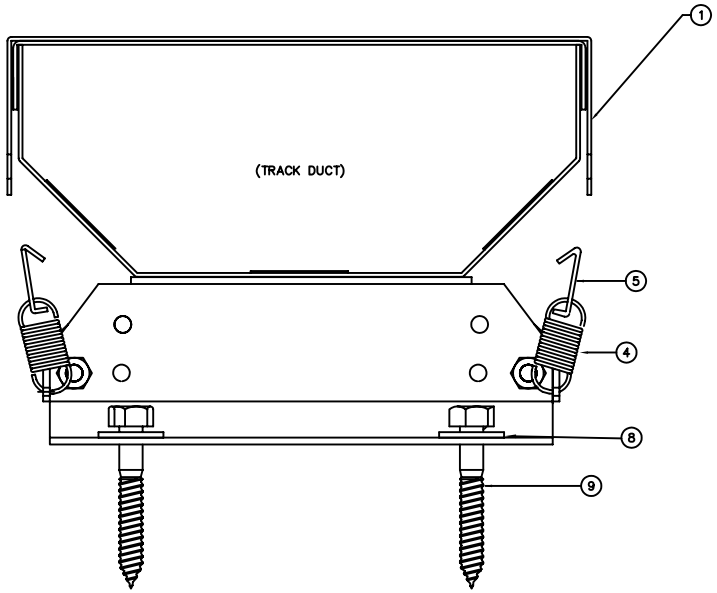

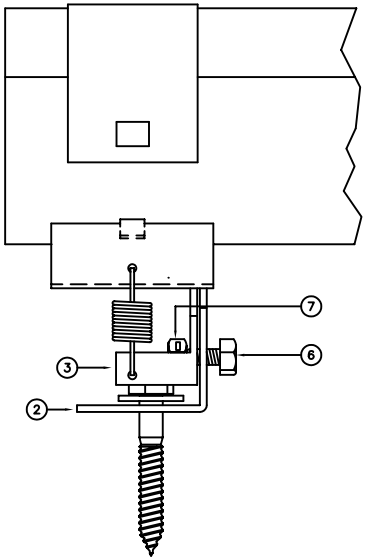

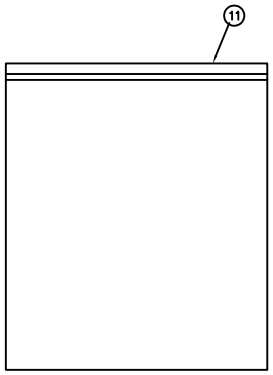

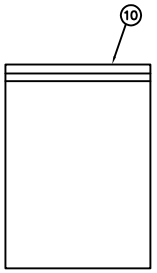

FORMED HOLES
"F" INDICATES FORMED INTO DRAWING
"U" INDICATES FORMED UP FROM DRAWING
REF.SCHEMATIC NO.
REF.CONNECTION DIA.
CAD NO.
MADE FROM

UNLESS OTHERWISE SPECIFIED
ALL BENDS ARE 90°
ALL BENDS HAVE MIN. RADIUS
DIMENSIONS ARE IN INCHES
TOLERANCE ON
FRACTIONS ± 1/32
DECIMALS .XX ±.03 .XXX ±.010 .XXXX ±.005
ANGLES ±1.00°
MATERIAL
FINISH

DRAWN BY EFK
DATE 6/21/91
CHECKED BY
DATE
APPROVED BY
DATE
SHEET 1 OF 1

RAILWAY EQUIPMENT CO.
DELANO, MINNESOTA (763) 972-2200

TITLE
TRACK DUCT
SUPPORT BRKT
SUB-ASSEMBLY

DWG NO. 92774
REV. K

PARTS LIST					
ITEM	PART NUMBER	REV	UOM	QTY	DESCRIPTION
1	21016	-	EA	1	CONNECTOR, HOUSING, 10 POS
2	21017	-	EA	1	STRAIN RELIEF, 10 POS
3	21020	-	EA	2	CONNECTOR, HOUSING, 2 POS
4	21021	-	EA	2	STRAIN RELIEF, 2 POS
5	21023	-	EA	1	STRAIN RELIEF, 3 POS
6	21212	-	EA	1	CONNECTOR, HOUSING, 3 POS 18GA
7	28029	-	EA	1	TERMINAL ASSY, 1 X 12 POS
8	28090	-	EA	1	CAP, TERMINAL POST INSULATING
9	28091	-	EA	1	SHIELD, TERMINAL POST INSULATE
10	2831211106	-	EA	1	SCREW, #6-32 X 3/8 PAN SLT
11	2831311106	-	EA	9	SCREW, #8-32 X 3/8 PAN SLT
12	2831411106	-	EA	9	SCREW, #10-32 X 3/8 PAN SLT
13	2831411110	-	EA	3	SCREW, #10-32 X 5/8 PAN SLT
14	2833-3110	-	EA	1	WASHER, #8 FLAT SAE
15	2833-4310	-	EA	2	WASHER, #10 EXT. STAR
16	45124	-	EA	1	CONTACTOR, 3POLE, 115V COIL
17	45181	-	EA	1	OVERLOAD RELAY, 240V 2HP MOTOR
18	51203	-	EA	1	CIR BRKR, 30A 240V 2POLE
19	51204	-	EA	1	BRACKET, GE CIRCUIT BREAKER
20	6031-0103	-	EA	1	LUG, FORK #10 22-18GA NYLON
21	6032-0110	-	EA	11	LUG, RING 1/4 22-18GA NYLON
22	6032-0111	-	EA	3	LUG, RING #10 16-14GA NYLON
23	6032-0112	-	EA	3	LUG, RING 1/4 16-14GA NYLON
24	6034-0102	-	EA	3	LUG, PUSH-ON F .250 22-18GA
25	6090-0102	-	EA	1	CABLE TIE MOUNTS
26	6093-0004	-	IN	18	WIRE DUCT, 1.5IN X 3IN
27	6093-0303	-	IN	18	WIRE DUCT, COVER 1.5 IN
28	681001	-	EA	31	WIRE, 10GA BLACK 600V 105C
29	681601	-	EA	36	WIRE, 18GA GREEN - HOOK UP
30	681832	-	EA	44	WIRE, 300V 105C BLACK
31	681833	-	EA	24	WIRE,18GA THINWALL WHITE 300V
32	681834	-	EA	41	WIRE, 18GA THINWALL RED 300V
33	681835	-	EA	86	WIRE, 18GA THINWALL BROWN 300V
34	681836	-	EA	130	WIRE, 18GA THINWALL BLUE 300V
35	9338-0015	C	EA	1	TRANSFORMER, CONTROL MODULE
36	9338-0320	J	EA	1	CONTROL MODULE, GHAB W/ DISP
37	9338-0325	B	EA	1	SURGE ARRESTOR ASSY, 240V 1PH
38	95075	B	EA	1	PANEL, ELECTRIC HAB
39	9508-0037	A	EA	1	ASSY, CURRENT COIL 100A AC
40	R9330-0021	B	EA	1	LABEL, TERM POST SNO NET

REVISION HISTORY				
REV	ECO #	DESCRIPTION	DATE	BY
A	09-0012	NEW PART	9/10/09	ES
B	11-0014	NEW MODULE	06/22/11	GJ

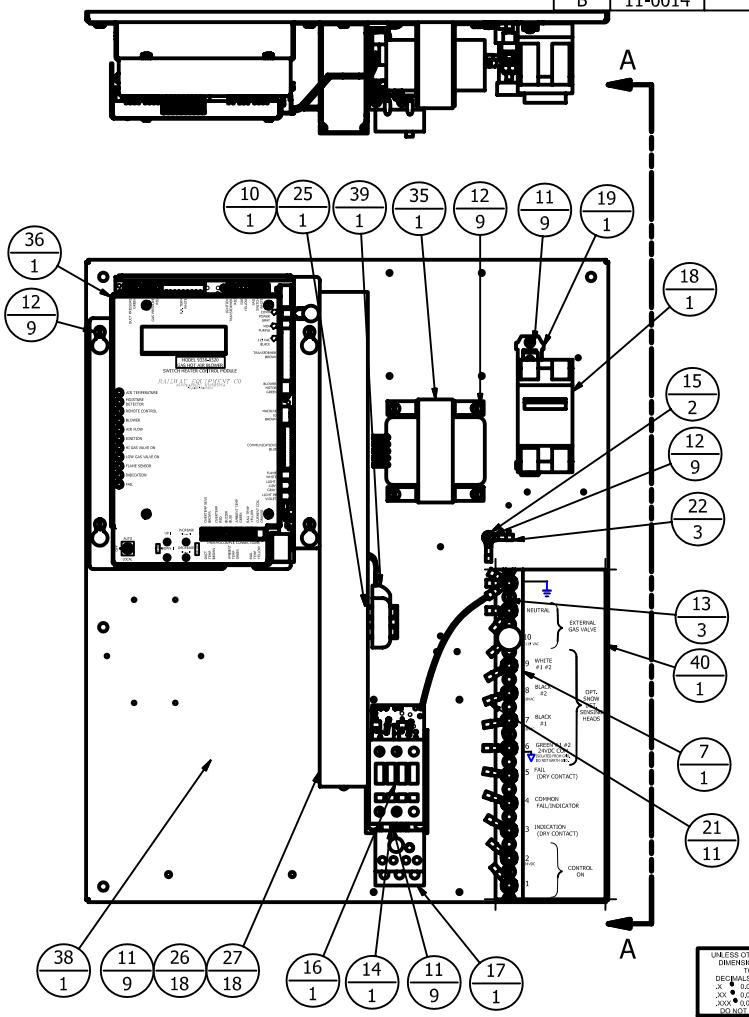

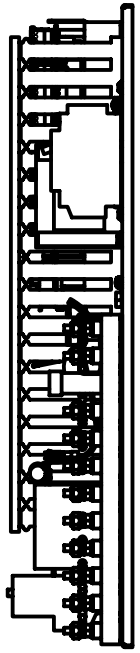

VIEW A-A
SCALE 1 / 4

UNLESS OTHERWISE SPECIFIED: DIMENSIONS ARE IN INCHES
TOLERANCES
DECIMALS .X ± 0.035 .XX ± 0.010 .XXX ± 0.005
ANGULAR ± 0.5
FRACTIONS ± 1/32
DO NOT SCALE DRAWING

RAILWAY EQUIPMENT CO.
MINNEAPOLIS, MINNESOTA (763) 972-2300

DRAWN: EJS
DATE: 09/10/2009
MATL: N / A
BEND ALLOWANCE: N / A

TITLE: ASSY, GHAB CONTROL 2HP 1PH 240
(ASSEMBLY / B. O. M.)

DWG NO: 9508-0150 REV: B
SCALE: 1 : 4 DWG SIZE: B SHEET 1 OF 1

PARTS LIST					
ITEM	PART NUMBER	REV	UOM	QTY	DESCRIPTION
1	21016	-	EA	1	CONNECTOR, HOUSING, 10 POS
2	21017	-	EA	1	STRAIN RELIEF, 10 POS
3	21020	-	EA	2	CONNECTOR, HOUSING, 2 POS
4	21021	-	EA	2	STRAIN RELIEF, 2 POS
5	21023	-	EA	1	STRAIN RELIEF, 3 POS
6	21212	-	EA	1	CONNECTOR, HOUSING, 3 POS 18GA
7	28029	-	EA	1	TERMINAL ASSY, 1 X 12 POS
8	28090	-	EA	1	CAP, TERMINAL POST INSULATING
9	28091	-	EA	1	SHIELD, TERMINAL POST INSULATE
10	2831211106	-	EA	3	SCREW, #6-32 X 3/8 PAN SLT
11	2831311106	-	EA	13	SCREW, #8-32 X 3/8 PAN SLT
12	2831411106	-	EA	13	SCREW, #10-32 X 3/8 PAN SLT
13	2831411110	-	EA	3	SCREW, #10-32 X 5/8 PAN SLT
14	2833-3110	-	EA	1	WASHER, #8 FLAT SAE
15	2833-4310	-	EA	1	WASHER, #10 EXT. STAR
16	45124	-	EA	1	CONTACTOR, 3POLE, 115V COIL
17	45136	-	EA	1	AUXILIARY CONTACT NO/NC
18	45188	-	EA	1	OVERLOAD RELAY, 1.8 - 2.7 AMPS
19	5111-0601	-	EA	2	FUSE, 500V 1AMP SLO-BLO
20	51200	-	EA	1	CIR BRKR, 15A 600V 3 POLE
21	5122-0400	-	EA	1	FUSEBLOCK, 600V 30A 2 POLE
22	5122-0401	-	EA	2	FUSEBLOCK COVER
23	56058	-	EA	1	TRANS, 575 MAX P-115S 300VA
24	6031-0101	-	EA	1	LUG, FORK #6 16-14GA NYLON
25	6031-0102	-	EA	2	LUG, FORK #6 22-18GA NYLON
26	6031-0103	-	EA	1	LUG, FORK #10 22-18GA NYLON
27	6032-0110	-	EA	11	LUG, RING 1/4 22-18GA NYLON
28	6032-0111	-	EA	3	LUG, RING #10 16-14 GA NYLON
29	6032-0112	-	EA	4	LUG, RING 1/4 16-14GA NYLON
30	6034-0101	-	EA	1	LUG, PUSH-ON F .250 16-14GA
31	6034-0102	-	EA	3	LUG, PUSH-ON F .250 22-18GA
32	6090-0102	-	EA	1	CABLE TIE MOUNTS
33	6093-0004	-	IN	18	WIRE DUCT, 1.5IN X 3IN
34	6093-0100	-	EA	32	TY-RAP, 4IN 0.10 WIDTH
35	6093-0303	-	IN	18	WIRE DUCT, COVER 1.5 IN
36	681401	-	FT	4.5	WIRE, 14 GA BLACK 600V 105C
37	681601	-	IN	24	WIRE, 16 GA GREEN - HOOK UP
38	681831	-	IN	80	WIRE, 18 GA 600V THINWALL BLACK
39	681833	-	IN	23	WIRE, 18 GA THINWALL WHITE 600V
40	681834	-	IN	50	WIRE, 18 GA THINWALL RED 600V
41	681835	-	IN	112	WIRE, 18 GA THINWALL BROWN 600V
42	681836	-	IN	140	WIRE, 18 GA THINWALL BLUE 600V
43	9338-0015	C	EA	1	TRANSFORMER, CONTROL MODULE
44	9338-0320	J	EA	1	CONTROL MODULE, GHAB W/ DISP
45	9338-0326	B	EA	1	SURGE ARRESTOR ASSY, 600V 3PH
46	95075	B	EA	1	PANEL, ELECTRIC HAB
47	9508-0037	A	EA	1	ASSY, CURRENT COIL 100A AC
48	R9330-0021	B	EA	1	LABEL, TERM POST SNO NET

REVISION HISTORY					
REV	ECO	BY	DESCRIPTION	DATE	APPROVED
A	06-0020	WS	NEW PART	8/30/06	-
B	-	RJ	REV PRT# 9338-0115	10/26/2006	-
C	07-0013	RMJ	UPDATE TO MODULE	6/7/2007	-
D	08-0006	WS	NEW TRANSFORMERS / NEW COM. BOX	3/31/08	-
K	11-0014	GJ	NEW MODULE/ NEW PANEL	07/12/11	

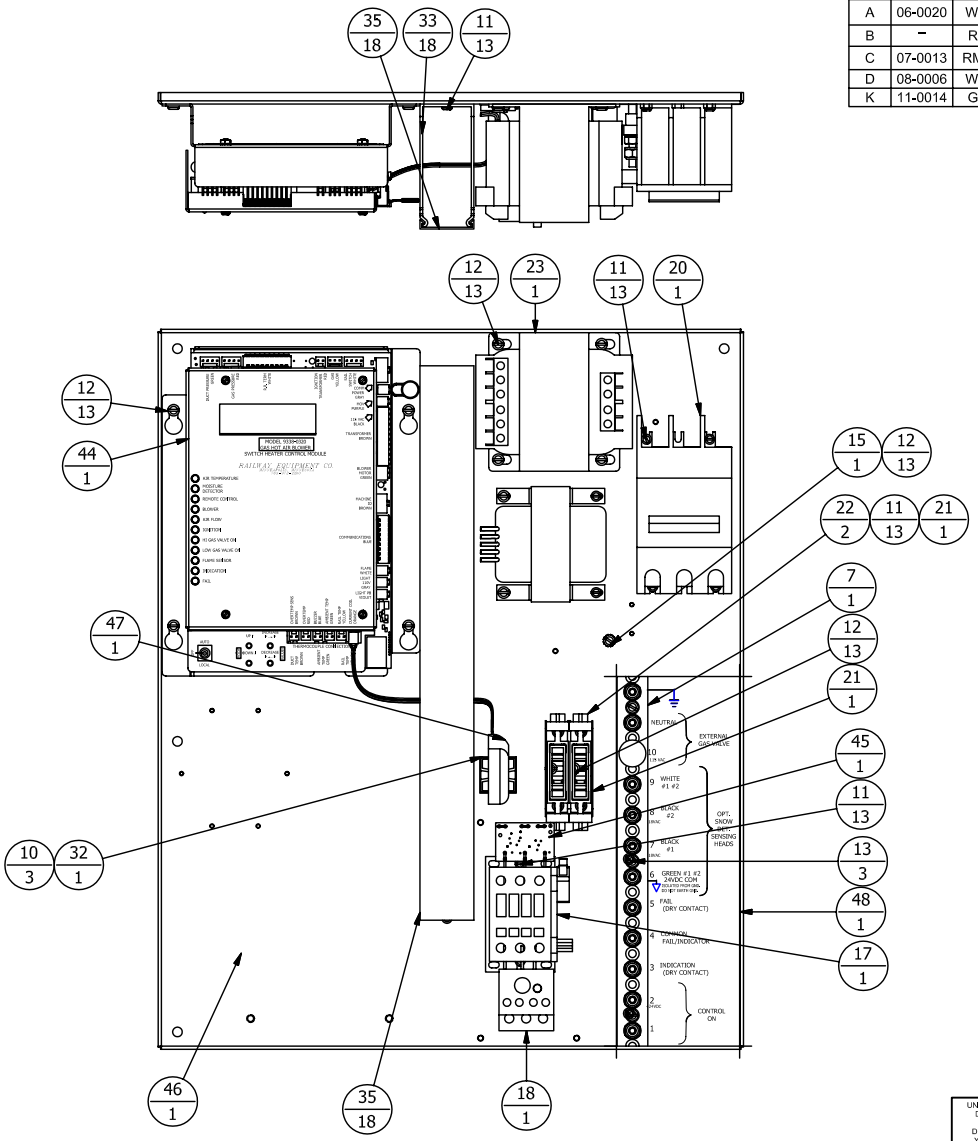

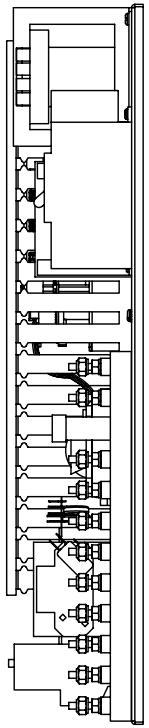

UNLESS OTHERWISE SPECIFIED: DIMENSIONS ARE IN INCHES
TOLERANCES:
DECIMALS .X ± .1 .XX ± .030 .XXX ± .015
ANGULAR ± 1°
FRACTIONS ± 1/32
DO NOT SCALE DRAWING

RAILWAY EQUIPMENT CO.
MINNEAPOLIS, MINNESOTA (763) 972-2200

TITLE: ASSY, GHAB CONTROL 3PH 575V

(ASSEMBLY)

DRAWN: WJS

DATE: 8/30/06

MATL: SEE B.O.M.

BEND ALLOWANCE: N/A

DWG NO: 9508-0125

REV: K

SCALE: 1/4 DWG SIZE: B SHEET 1 OF 1

PARTS LIST					
ITEM	PART NUMBER	REV	UOM	QTY	DESCRIPTION
1	21016	-	EA	1	CONNECTOR, HOUSING, 10 POS
2	21017	-	EA	1	STRAIN RELIEF, 10 POS
3	21020	-	EA	2	CONNECTOR, HOUSING, 2 POS
4	21021	-	EA	2	STRAIN RELIEF, 2 POS
5	21023	-	EA	1	STRAIN RELIEF, 3 POS
6	21212	-	EA	1	CONNECTOR, HOUSING, 3 POS 18GA
7	28029	-	EA	1	TERMINAL ASSY, 1 X 12 POS
8	28090	-	EA	1	CAP, TERMINAL POST INSULATING
9	28091	-	EA	1	SHIELD, TERMINAL POST INSULATE
10	2831211106	-	EA	1	SCREW, #6-32 X 3/8 PAN SLT
11	2831281103	-	EA	2	SCREW, #6-32 X 3/16 FLSTR SLT
12	2831311106	-	EA	8	SCREW, #8-32 X 3/8 PAN SLT
13	2831411106	-	EA	9	SCREW, #10-32 X 3/8 PAN SLT
14	2831411108	-	EA	4	SCREW, #10-32 X 1/2 PAN SLT
15	2831411110	-	EA	3	SCREW, #10-32 X 5/8 PAN SLT
16	2831541132	-	EA	2	SCREW, 1/4-20 X 2 RND SLT
17	2832-5101	-	EA	6	NUT, 1/4-20 HEX
18	2833-2210	-	EA	2	WASHER, #6 SPLIT LOCK
19	2833-3110	-	EA	1	WASHER, #8 FLAT SAE
20	2833-4310	-	EA	2	WASHER, #10 EXT. STAR
21	2833-5110	-	EA	2	WASHER, 1/4 FLAT
22	2833-5211	-	EA	6	WASHER, 1/4 SPLIT LOCK
23	45124	-	EA	1	CONTACTOR, 3POLE, 115V COIL
24	51203	-	EA	1	CIR BRKR, 30A 240V 2POLE
25	51204	-	EA	1	BRACKET, GE CIRCUIT BREAKER
26	5300-0203	-	EA	1	HEATER, STRIP 115V 125W
27	53080	-	EA	1	SENSOR, AIR TEMP
28	60023	-	FT	5	WIRE, 5000V 18GA BLACK
29	60172	-	EA	2	LUG, RING #10 22-18GA HI-TEMP
30	6031-0103	-	EA	1	LUG, FORK #10 22-18GA NYLON
31	6032-0110	-	EA	12	LUG, RING 1/4 22-18GA NYLON
32	6032-0111	-	EA	3	LUG, RING #10 16-14GA NYLON
33	6032-0112	-	EA	3	LUG, RING 1/4 16-14GA NYLON
34	6034-0102	-	EA	3	LUG, PUSH-ON F .250 22-18GA
35	6090-0102	-	EA	1	CABLE TIE MOUNTS
36	6093-0004	-	IN	14	WIRE DUCT, 1.5IN X 3IN
37	6093-0303	-	IN	14	WIRE DUCT, COVER 1.5 IN
38	61086	-	EA	1	DRIVE AC 2 HP 230V 1PH INPUT
39	681001	-	IN	31	WIRE, 10GA BLACK 600V 105C
40	681601	-	IN	24	WIRE, 16GA GREEN-HOOK UP
41	681832	-	IN	44	WIRE, 18GA 300V 105C BLACK
42	681833	-	IN	24	WIRE, 18GA THINWALL WHITE 300V
43	681834	-	IN	41	WIRE, 18GA THINWALL RED 300V
44	681835	-	IN	86	WIRE, 18GA THINWALL BROWN 300V
45	681836	-	IN	130	WIRE, 18GA THINWALL BLUE 300V
46	8039-0813	A	EA	1	LABEL, HOT DO NOT TOUCH
47	9220-0029	A	EA	1	COVER, HEAT SHIELD
48	9338-0015	C	EA	1	TRANSFORMER, CONTROL MODULE
49	9338-0320	J	EA	1	CONTROL MODULE, GHAB W/ DISP
50	9338-0325	B	EA	1	SURGE ARRESTOR ASSY, 240V 1PH
51	95075	B	EA	1	PANEL, ELECTRIC HAB
52	9508-0037	A	EA	1	ASSY, CURRENT COIL 100A AC
53	R9330-0021	B	EA	1	LABEL, TERM POST SNO NET

REVISION HISTORY				
REV	ECO #	DESCRIPTION	DATE	BY
A	10-0012	NEW PART	7/23/10	ES
B	11-0014	UPDATED MODULE	06/29/11	GJ

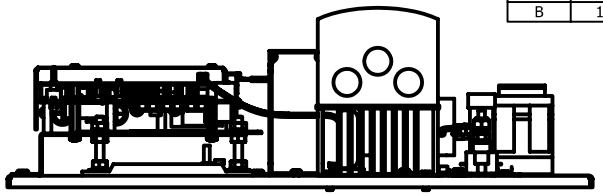

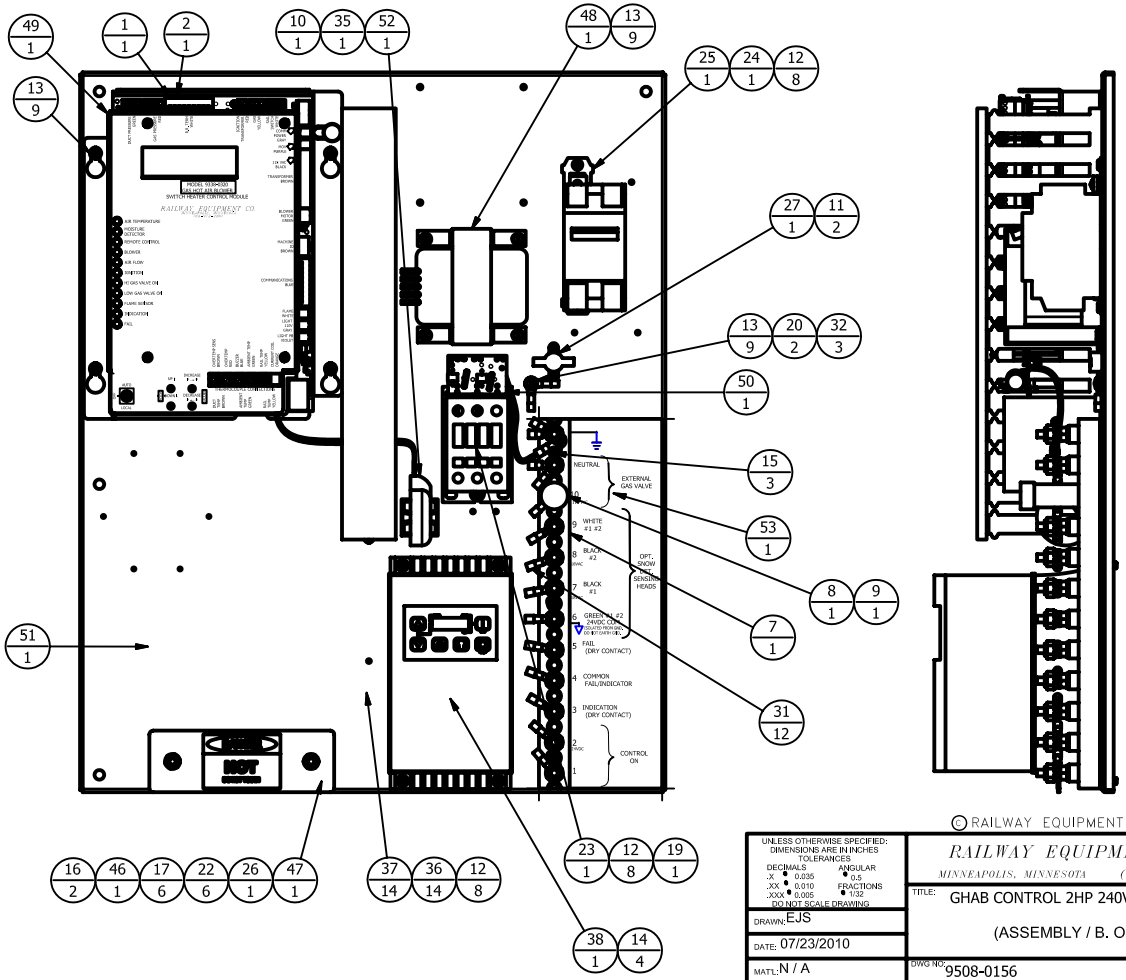

UNLESS OTHERWISE SPECIFIED: DIMENSIONS ARE IN INCHES
TOLERANCES
DECIMALS .X ± 0.035 .XX ± 0.010 .XXX ± 0.005
ANGULAR ± 0.5
FRACTIONS ± 1/32
DO NOT SCALE DRAWING

DRAWN: EJS
DATE: 07/23/2010
MATL: N / A
BEND ALLOWANCE: N / A

RAILWAY EQUIPMENT CO.
MINNEAPOLIS, MINNESOTA (763) 972-2200

TITLE: GHAB CONTROL 2HP 240V AC DRIVE
(ASSEMBLY / B. O. M.)

DWG NO: 9508-0156
REV: B
SCALE: 1 : 4
DWG SIZE: B
SHEET 1 OF 1

SYM.	E.C.O.	BY	REVISION DESCRIPTION	DATE	APPROVED

B	---	JB	REVISON B	2/24/09	
C	---	GJ	NEW MODULE	07/05/11	

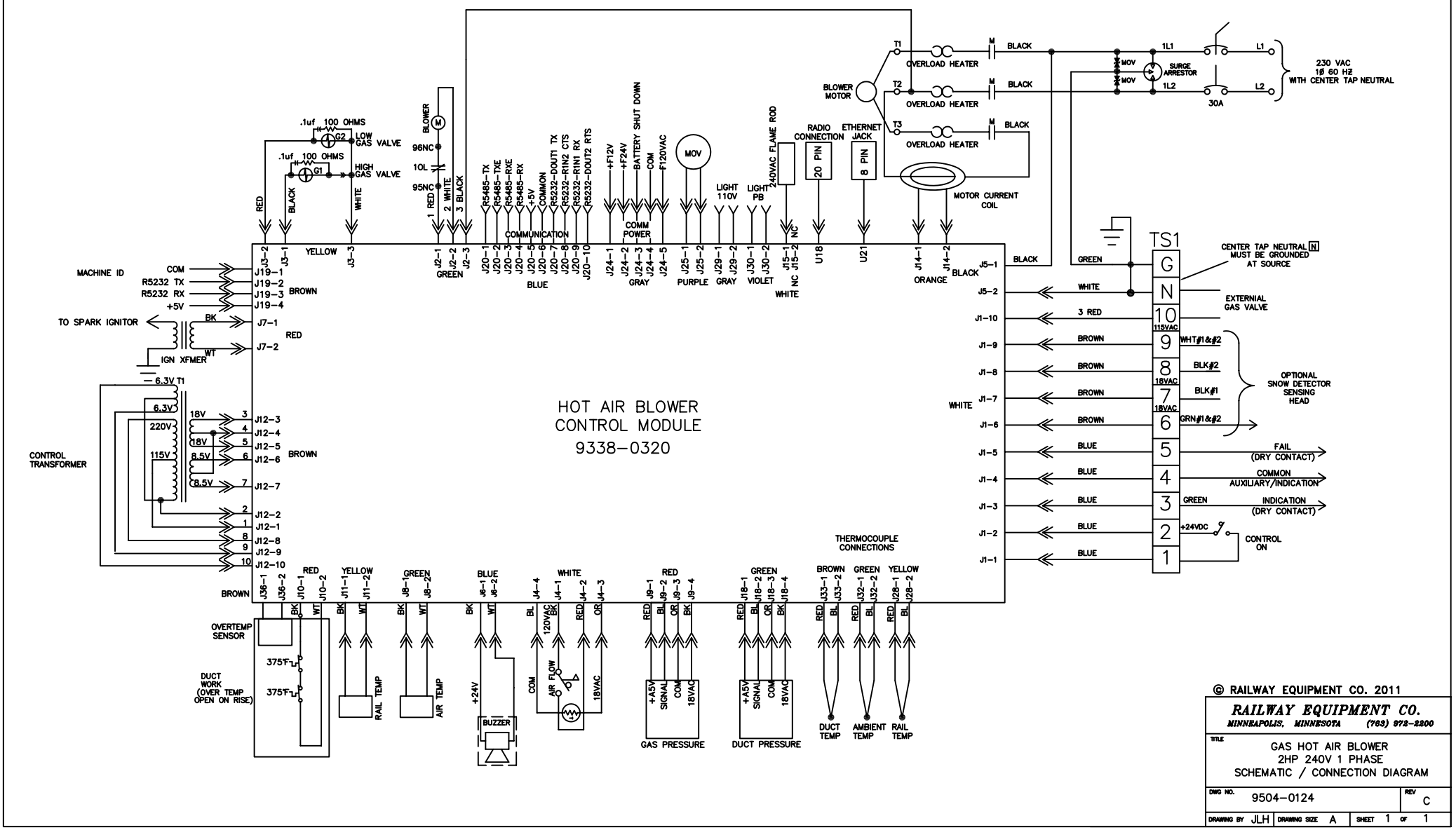

RAILWAY EQUIPMENT CO.
MINNEAPOLIS, MINNESOTA (763) 972-2200

TITLE: GAS HOT AIR BLOWER
2HP 240V 1 PHASE
SCHEMATIC / CONNECTION DIAGRAM

DWG NO. 9504-0124 REV C

DRAWING BY JLH | DRAWING SIZE A | SHEET 1 OF 1

SYM.	E.C.O.	BY	REVISION DESCRIPTION	DATE	APPROVED
	--- ---				
B	---	JB	REVISION B	2/24/09	
C	09-0014	ES	ADDED 208/230VAC	7/7/09	
D	11-0014	GJ	NEW MODULE	07/05/11	

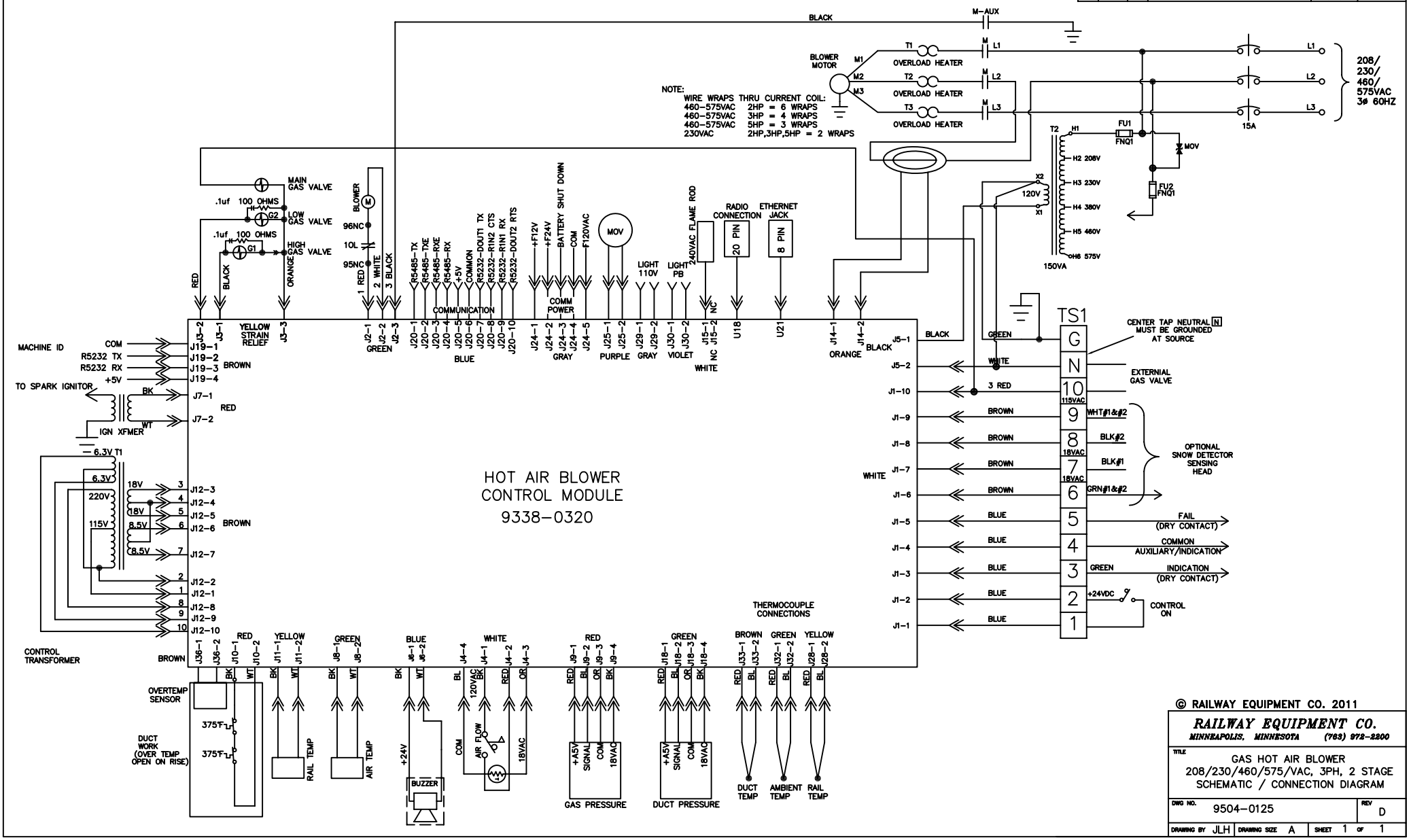

RAILWAY EQUIPMENT CO.
MINNEAPOLIS, MINNESOTA (763) 972-2200

TITLE
GAS HOT AIR BLOWER
208/230/460/575/VAC, 3PH, 2 STAGE
SCHEMATIC / CONNECTION DIAGRAM

DWG NO.	REV
9504-0125	D

DRAWING BY JLH | DRAWING SIZE A | SHEET 1 OF 1

SYM.	E.C.O.	BY	REVISION DESCRIPTION	DATE	APPROVED
A	09-0012	JB	NEW DRAWING	05/27/09	
C	11-0014	GJ	NEW MODULE	07/05/11	

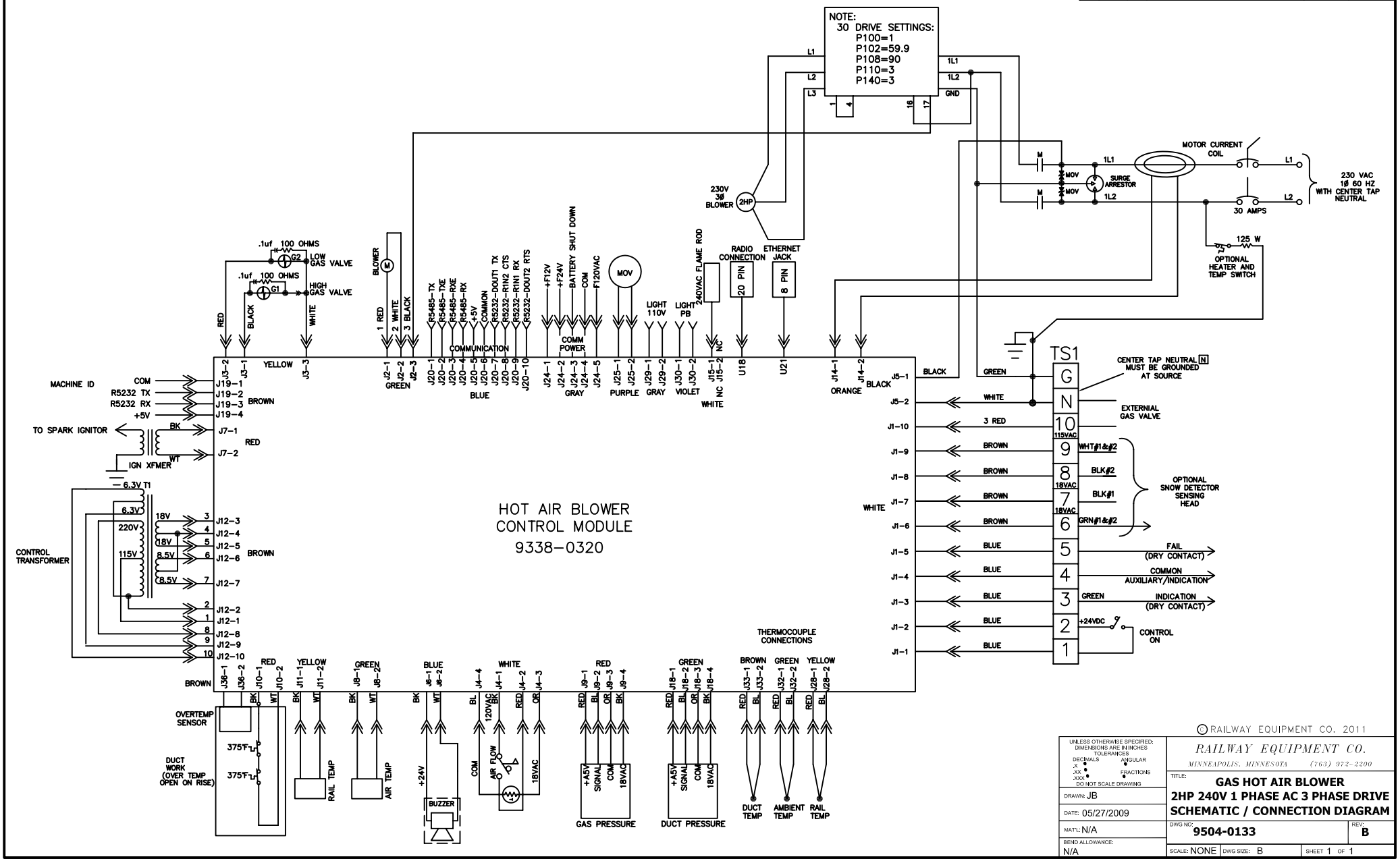

UNLESS OTHERWISE SPECIFIED: DIMENSIONS ARE IN INCHES TOLERANCES DECIMALS .X .XX .XXX ANGULAR FRACTIONS DO NOT SCALE DRAWING

RAILWAY EQUIPMENT CO.
MINNEAPOLIS, MINNESOTA (763) 972-2200

TITLE: GAS HOT AIR BLOWER
2HP 240V 1 PHASE AC 3 PHASE DRIVE
SCHEMATIC / CONNECTION DIAGRAM

DRAWN: JB
DATE: 05/27/2009
MAT'L: N/A
BEND ALLOWANCE: N/A
DWG NO: 9504-0133
REV: B
SCALE: NONE
DWG SIZE: B
SHEET 1 OF 1

Parts List					
ITEM	PART NUMBER	REV	UOM	QTY	DESCRIPTION
1	21023	-	EA	1	STRAIN RELIEF, 3 POS
2	21212	-	EA	1	CONNECTOR, HOUSING, 3 POS 18GA
3	2831551134	-	EA	8	BOLT, 1/4-20 X 1-3/4 HEX HEAD SS
4	2833-5115	-	EA	8	WASHER, 1/4 FLAT SS
5	2833-5241	-	EA	8	WASHER, 1/4 SPLIT LOCK SS
6	29051	-	EA	2	BOLT, 1/4-20 X 1/2 WITH 1/2 HD
7	45035	-	EA	2	VALVE, K3A552, 0-3PSI GAS
8	60002	-	EA	3	3/8 ROMEX
9	60011	-	EA	1	CONNECTOR, CORD 1/2INCH STRT
10	60035	-	EA	2	BUSHING, 1/2 IN PLASTIC INSUL
11	60160	-	EA	1	CONDUIT, LOCK NUT 1/2 IN
12	60197	-	EA	1	FLEX HOSE 3/4 X 18 - 5/8 OD
13	60225	-	EA	1	TEE, 3/4 X 3/4 X 3/4 SCH 40
14	60231	-	EA	4	O-RING, BUNA-N, 3/16 WIDE
15	60234	-	EA	1	TEE, 3/4 X 3/4 X 1/4 SCH 40 BLK
16	60241	-	IN	60	CABLE, 4 COND 18GA PVC 600V
17	6092-0201	-	EA	5	LUG, WIRE JOINT NYLON
18	6093-0100	-	EA	2	TY-RAP, 4IN 0.10 WIDTH
19	61000	-	EA	2	U-BOLT, MRO BOLT #05
20	61001	-	EA	2	ELBOW, 3/4IN SCH 40 BLACK
21	61011	-	EA	4	NIPPLE, 3/4 X 1.5 SCH 40 BLACK
22	61013	-	EA	1	NIPPLE, 3/4 X 3 SCH 40 BLACK
23	61017	-	EA	1	NIPPLE, 3/4 X 7 SCH 40 BLACK
24	61021	-	EA	1	NIPPLE, 3/4 X 2.5 SCH 40 BLACK
25	61057	-	EA	1	NIPPLE, 3/4 X 3.5 SCH 40 BLACK
26	61074	-	EA	1	NIPPLE, 3/4 X 15 SCH 40 BLACK
27	681820	-	FT	1.5	CORD, STRAIGHT 18/2 SJTOW
28	933431	A	EA	2	SUPPORT GAS LINE TWO-STAGE
29	933611	A	EA	1	OUTLET MANIFOLD, GAS LINE
30	933612	D	EA	2	COUPLING PLATE 3/4 NPT
31	933620	C	EA	1	UNIVERSAL ORIFICE PLATE
32	9338-0043	A	EA	2	SNUBBER ASSY, GAS VALVE
33	9338-0070	A	EA	1	ASSY, PRESSURE SENSOR

REVISION HISTORY				
REV	ECO	DESCRIPTION	DATE	BY
A	--	NEW PART	8/10/2006	RMJ
B	10-0031	REMOVED CONDUIT	01/10/11	MF

GAS VALVE WIRING DIAGRAM

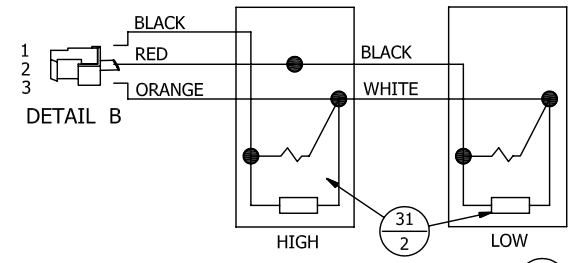

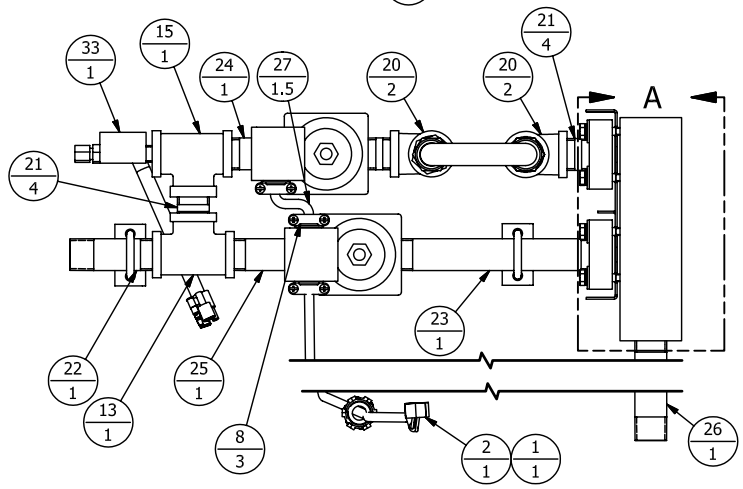

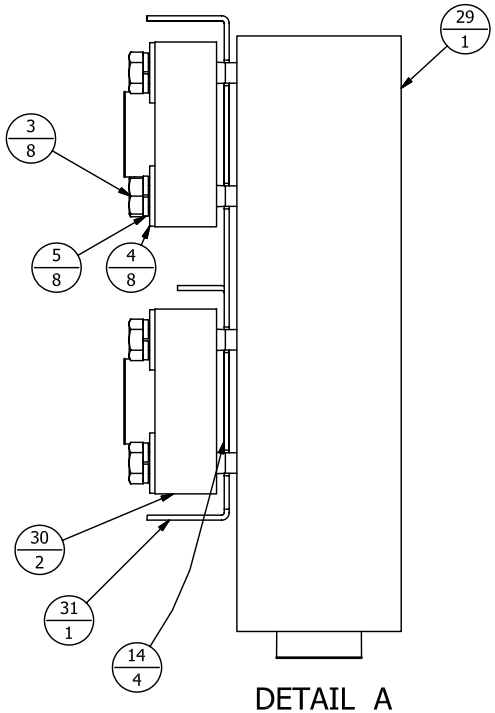

DETAIL A
SCALE 2 / 3

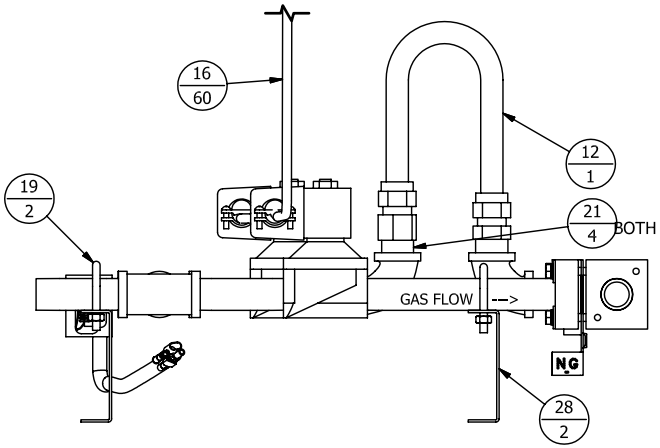

NOTE:
1. USE LOCTITE 401 SEALANT TO INSTALL THE FOUR O-RINGS INTO THE OUTLET MANIFOLD AND THE COUPLING PLATES. DO NOT USE LOCTITE BETWEEN THE O-RINGS AND THE ORIFICE PLATE.
2. WATCH THE GAS FLOW DIRECTION WHEN INSTALLING THE GAS VALVES.

UNLESS OTHERWISE SPECIFIED: DIMENSIONS ARE IN INCHES
TOLERANCES:
DECIMALS .X ± 0.1 .XX ± 0.02 .XXX ± 0.01
ANGULAR ± 1°
FRACTIONS ± 1/32
DO NOT SCALE DRAWING

RAILWAY EQUIPMENT CO.
MINNEAPOLIS, MINNESOTA (763) 972-2200

TITLE: GHAB GAS PIPING W PRESS SENSOR ASSY/BOM

DRAWN: RMJ
DATE: 08/10/06
MAT'L: N/A
BEND ALLOWANCE: N/A
DWG NO: 9608-0138
REV: B
SCALE: 1/4
DWG SIZE: B
SHEET 1 OF 1

GHAB MENU

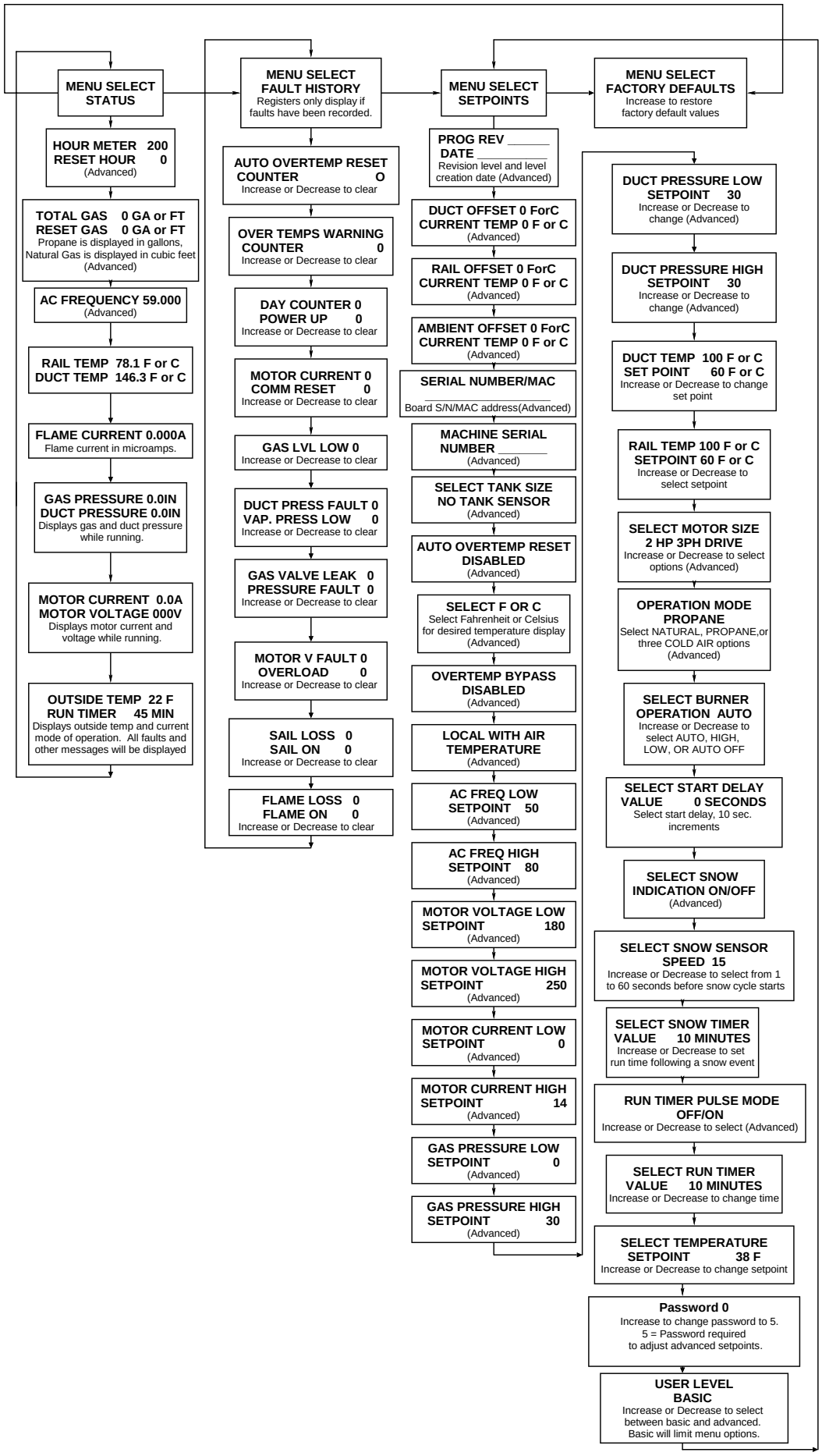
MENU SELECT STATUS
HOUR METER 200
RESET HOUR 0
(Advanced)
TOTAL GAS 0 GA or FT
RESET GAS 0 GA or FT
Propane is displayed in gallons, Natural Gas is displayed in cubic feet (Advanced)
AC FREQUENCY 59.000
(Advanced)
RAIL TEMP 78.1 F or C
DUCT TEMP 146.3 F or C
FLAME CURRENT 0.000A
Flame current in microamps.
GAS PRESSURE 0.0IN
DUCT PRESSURE 0.0IN
Displays gas and duct pressure while running.
MOTOR CURRENT 0.0A
MOTOR VOLTAGE 000V
Displays motor current and voltage while running.
OUTSIDE TEMP 22 F
RUN TIMER 45 MIN
Displays outside temp and current mode of operation. All faults and other messages will be displayed
MENU SELECT FAULT HISTORY
Registers only display if faults have been recorded.
AUTO OVERTEMP RESET COUNTER O
Increase or Decrease to clear
OVER TEMPS WARNING COUNTER 0
Increase or Decrease to clear
DAY COUNTER 0
POWER UP 0
Increase or Decrease to clear
MOTOR CURRENT 0
COMM RESET 0
Increase or Decrease to clear
GAS LVL LOW 0
Increase or Decrease to clear
DUCT PRESS FAULT 0
VAP. PRESS LOW 0
Increase or Decrease to clear
GAS VALVE LEAK 0
PRESSURE FAULT 0
Increase or Decrease to clear
MOTOR V FAULT 0
OVERLOAD 0
Increase or Decrease to clear
SAIL LOSS 0
SAIL ON 0
Increase or Decrease to clear
FLAME LOSS 0
FLAME ON 0
Increase or Decrease to clear
MENU SELECT SETPOINTS
PROG REV _____
DATE _____
Revision level and level creation date (Advanced)
DUCT OFFSET 0 ForC
CURRENT TEMP 0 F or C
(Advanced)
RAIL OFFSET 0 ForC
CURRENT TEMP 0 F or C
(Advanced)
AMBIENT OFFSET 0 ForC
CURRENT TEMP 0 F or C
(Advanced)
SERIAL NUMBER/MAC
_____
Board S/N/MAC address(Advanced)
MACHINE SERIAL NUMBER _____
(Advanced)
SELECT TANK SIZE
NO TANK SENSOR
(Advanced)
AUTO OVERTEMP RESET
DISABLED
(Advanced)
SELECT F OR C
Select Fahrenheit or Celsius for desired temperature display
(Advanced)
OVERTEMP BYPASS
DISABLED
(Advanced)
LOCAL WITH AIR TEMPERATURE
(Advanced)
AC FREQ LOW
SETPOINT 50
(Advanced)
AC FREQ HIGH
SETPOINT 80
(Advanced)
MOTOR VOLTAGE LOW
SETPOINT 180
(Advanced)
MOTOR VOLTAGE HIGH
SETPOINT 250
(Advanced)
MOTOR CURRENT LOW
SETPOINT 0
(Advanced)
MOTOR CURRENT HIGH
SETPOINT 14
(Advanced)
GAS PRESSURE LOW
SETPOINT 0
(Advanced)
GAS PRESSURE HIGH
SETPOINT 30
(Advanced)
MENU SELECT FACTORY DEFAULTS
Increase to restore factory default values
DUCT PRESSURE LOW
SETPOINT 30
Increase or Decrease to change (Advanced)
DUCT PRESSURE HIGH
SETPOINT 30
Increase or Decrease to change (Advanced)
DUCT TEMP 100 F or C
SET POINT 60 F or C
Increase or Decrease to change set point
RAIL TEMP 100 F or C
SETPOINT 60 F or C
Increase or Decrease to select setpoint
SELECT MOTOR SIZE
2 HP 3PH DRIVE
Increase or Decrease to select options (Advanced)
OPERATION MODE
PROPANE
Select NATURAL, PROPANE,or three COLD AIR options
(Advanced)
SELECT BURNER OPERATION AUTO
Increase or Decrease to select AUTO, HIGH, LOW, OR AUTO OFF
SELECT START DELAY
VALUE 0 SECONDS
Select start delay, 10 sec. increments
SELECT SNOW INDICATION ON/OFF
(Advanced)
SELECT SNOW SENSOR
SPEED 15
Increase or Decrease to select from 1 to 60 seconds before snow cycle starts
SELECT SNOW TIMER
VALUE 10 MINUTES
Increase or Decrease to set run time following a snow event
RUN TIMER PULSE MODE
OFF/ON
Increase or Decrease to select (Advanced)
SELECT RUN TIMER
VALUE 10 MINUTES
Increase or Decrease to change time
SELECT TEMPERATURE
SETPOINT 38 F
Increase or Decrease to change setpoint
Password 0
Increase to change password to 5.
5 = Password required to adjust advanced setpoints.
USER LEVEL
BASIC
Increase or Decrease to select between basic and advanced.
Basic will limit menu options.

OPERATING MANUAL

MODEL NO. 963 BUNGALOW

GAS FIRED HOT AIR BLOWER

TRACK SWITCH SNOW MELTER

WITH STEEL TIE DUCT

MANUFACTURED

BY

RAILWAY EQUIPMENT COMPANY
525 NINTH STREET SOUTH
DELANO, MINNESOTA 55328
TEL. 763-972-2200
FAX. 763-972-2900
E-Mail:
Support: Techsupport@rwy.com
Sales: Order@rwy.com

CAUTION

GENERAL HAZARD WARNING

FAILURE TO COMPLY WITH THE PRECAUTIONS AND INSTRUCTIONS PROVIDED WITH THIS HEATER, CAN RESULT IN DEATH, SERIOUS INJURY AND PROPERTY LOSS OR DAMAGE FROM HAZARDS OF FIRE, EXPLOSION, BURN, ASPHYXIATION, CARBON MONOXIDE POISONING, AND/OR ELECTRICAL SHOCK.

ONLY PERSONS WHO CAN UNDERSTAND AND FOLLOW THESE INSTRUCTIONS SHOULD USE OR SERVICE THIS HEATER.

IF YOU NEED ASSISTANCE OR HEATER INFORMATION, SUCH AS INSTRUCTION MANUALS, LABELS, ETC., CONTACT THE MANUFACTURER.

CAUTION

WARNING: FIRE, BURN, INHALATION, AND EXPLOSION HAZARD.

KEEP SOLID COMBUSTIBLES, SUCH AS BUILDING MATERIALS, PAPER OR CARDBOARD, A SAFE DISTANCE AWAY FROM THE HEATER AS RECOMMENDED BY THE INSTRUCTIONS. NEVER USE THE HEATER IN SPACES WHICH DO OR MAY CONTAIN VOLATILE OR AIRBORNE COMBUSTIBLES, OR PRODUCTS SUCH AS GASOLINE, SOLVENTS, PAINT THINNER, DUST PARTICLES OR UNKNOWN CHEMICALS.

CAUTION

NOT FOR HOME OR RECREATIONAL VEHICLE USE
The heater is designed and approved for use as a construction heater under ANSI Z83.7

We cannot anticipate every use which may be made of our heaters.
CHECK WITH LOCAL FIRE SAFETY AUTHORITY IF YOU HAVE QUESTIONS ABOUT APPLICATIONS.

Other standards govern the use of fuel gases and heat producing products in specific applications. Your local authority can advise you about these.

PLEASE READ THIS INSTRUCTION MANUAL ENTIRELY BEFORE HANDLING THIS MATERIAL OR ATTEMPTING TO INSTALL, OPERATE OR SERVICE THIS HOT AIR BLOWER SYSTEM.

PLEASE READ THE WARNINGS AND CAUTIONS LISTED BELOW.

CAUTION

SHEET METAL EDGES MAY BE VERY SHARP AND CAN CAUSE SEVERE CUTS OR LACERATIONS. PROTECTIVE GLOVES AND CLOTHING SHOULD BE WORN. USE CAUTION WHEN HANDLING ALL SHEET METAL COMPONENTS.

CAUTION

THIS HOT AIR BLOWER TRACK SWITCH SNOWMELTER SYSTEM CAN BE OPERATED REMOTELY OR BY A SNOW DETECTOR SYSTEM. THEREFORE, OPERATION MAY BEGIN UNEXPECTEDLY. USE CAUTION WHEN IN THE AREA.

CAUTION

SYSTEM OPERATES WITH VARIOUS VOLTAGE LEVELS UP TO 600VAC. CONTACT WITH ELECTRICITY CAN BE HAZARDOUS OR LETHAL. MAKE SURE THAT THE MAIN CIRCUIT BREAKER IS TURNED OFF BEFORE ATTEMPTING TO SERVICE THIS SYSTEM. EVEN WITH CIRCUIT BREAKER OFF LINE VOLTAGE IS PRESENT AT THE TOP CIRCUIT BREAKER CONNECTIONS.

CAUTION

THIS SYSTEM CONTAINS A HIGH SPEED AIR FAN WHICH ROTATES AT UP TO 3600RPM AND CREATES FORCEFUL SUCTION WHEN OPERATING. DO NOT OPERATE THE BLOWER SYSTEM IF ANY OF THE DUCTWORK COMPONENTS HAVE BEEN REMOVED.

CAUTION

THIS SYSTEM OPERATES WITH NATURAL GAS OR PROPANE. BOTH ARE GASES WHICH ARE FLAMMABLE AND EXPLOSIVE. USE EXTREME CAUTION WHEN WORKING IN THE AREA. AVOID ANY OPEN FLAME, SPARKS OR OTHER SOURCE OF IGNITION.

CAUTION

THE OUTLET AIR TEMPERATURE FROM THIS GAS SNOW MELTER SYSTEM SHOULD NOT EXCEED 375°F FROM ANY NOZZLE OR DUCT. **DO NOT OPERATE THIS BLOWER SYSTEM IF THE OUTLET TEMPERATURE EXCEEDS 375°F.** AN ACCURATE THERMOMETER SHOULD BE USED TO REGULARLY CHECK THE OUTLET AIR TEMPERATURE. IF THE OUTLET TEMPERATURE EXCEEDS 375°F, CHECK TO MAKE SURE THAT THE FLOW OF AIR IS NOT RESTRICTED AT ANY POINT, THAT THE BLOWER/MOTOR ARE OPERATING PROPERLY, THAT THE CORRECT ORIFICE IS USED FOR THE TYPE OF FUEL USED, AND THAT THE REGULATOR(S) ARE PROPERLY ADJUSTED FOR THE FUEL BEING USED. CONSULT RAILWAY EQUIPMENT COMPANY IF YOU ARE UNABLE TO OPERATE THIS GAS SNOW MELTER SYSTEM BELOW 375°F.

A HIGH TEMPERATURE LIMIT SYSTEM HAS BEEN INCORPORATED INTO ALL RAILWAY EQUIPMENT COMPANY GAS SNOW MELTER SYSTEMS BEGINNING IN 1999. RAILWAY EQUIPMENT COMPANY ALSO HAS A HIGH TEMPERATURE LIMIT MODIFICATION KIT THAT CAN BE ADDED TO GAS SNOW MELTER SYSTEMS MANUFACTURED PRIOR TO 1999. IT IS RECOMMENDED THAT THIS HIGH TEMPERATURE LIMIT SYSTEM BE INSTALLED AND USED. CONSULT RAILWAY EQUIPMENT TO ORDER THE HIGH TEMPERATURE MODIFICATION KIT, OR IF YOU NEED ASSISTANCE REGARDING THE HIGH TEMPERATURE LIMIT SYSTEM.

THIS SNOW MELTER SYSTEM HAS BEEN DESIGNED TO PROVIDE DEPENDABLE EFFECTIVE OPERATION IN ALL WEATHER CONDITIONS WITHOUT SWITCH COVERS. SWITCH COVERS MAY CAUSE HIGHER AIR TEMPERATURES. IF SWITCH COVERS ARE USED, YOU MUST DETERMINE A SAFE OPERATING AIR TEMPERATURE AND ADJUST BURNER PARAMETERS ACCORDINGLY. ADJUSTMENT OF BURNER PARAMETERS MAY NEGATIVELY AFFECT BURNER PERFORMANCE AND COMBUSTION CHARACTERISTICS TO THE EXTENT THAT THE BURNER MAY BE UNABLE TO MAINTAIN COMBUSTION. CONSULT RAILWAY EQUIPMENT COMPANY REGARDING BURNER OPERATING PARAMETERS.

TWO (2) COMPLETE INSTRUCTION MANUALS HAVE BEEN INCLUDED WITH THIS SNOW MELTER SYSTEM. PLEASE KEEP ONE OF THE MANUALS WITH THE SYSTEM AFTER INSTALLATION. ANYONE OPERATING OR SERVICING THIS SNOW MELTER SYSTEM SHOULD READ THE MANUAL ENTIRELY BEFORE PROCEEDING.

IF YOU HAVE ANY QUESTIONS CONCERNING THE MANUFACTURE, DESIGN, FUNCTION, INSTALLATION, OPERATION OR MAINTENANCE, CONTACT RAILWAY EQUIPMENT COMPANY BEFORE PROCEEDING.

TABLE OF CONTENTS

I. GENERAL INFORMATION

A. MODEL NUMBER DESCRIPTION

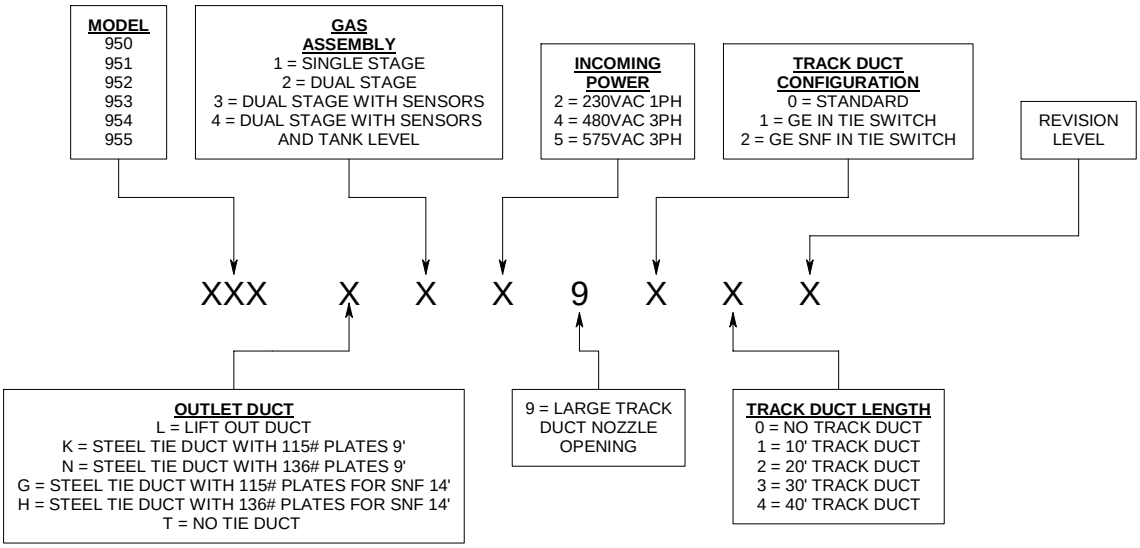

B. STANDARD FEATURES OF 950/951 SERIES TRACK SWITCH HOT AIR BLOWER

1. GHAB complies with AREMA 12.6.10.
2. Gas fired operation, allows for both propane and natural gas (convertible in the field)
3. Two stage operation (400,000 / 200,000 BTU) that allows savings on fuel costs.
4. 2 H.P. direct drive motor, totally enclosed fan cooled, 230VAC 60Hz, single phase.
5. High efficiency, quiet operation , 2000 CFM blower.
6. Remote operation via contact closure (low voltage, low current) with timed shut off.
7. Built-in snow detector system (requires Snow Detector assembly option).
8. Auto-Off-Force switch.
9. High temperature limit thermostat/shut off.
10. Adjustable air temperature control.
11. Adjustable rail temperature control.
12. Reply indication via GHAB contact closure.
13. Fail indication via GHAB contact closure.
14. Main circuit breaker.
15. Audible tone before blower startup
16. Weathertight gasketed control enclosure

17. Status indicating lights for all control functions
18. Start delay timer for sequential startup
19. Run timer for timed operation
20. Selectable "Transparent" snow detector operation
21. Snow detect timer
22. All ductwork and nozzles are thermally and electrically isolated from tracks
23. Quick-release track duct
24. Blower motor starter with overload protection
25. Remote auxiliary gas valve (115vac) supplied connection
26. Gas line accessories:
    - A. Manual gas valve
    - B. Gas line strainer
    - C. Low pressure regulator
    - D. Flexible gas line connection pipe
27. Elevated air intake
28. Adjustable delay for start up (10 Sec. -5 Min.)
29. Complete flame safeguard control:
    - A. Pre-ignition air purge.
    - B. Air flow proving switch
    - C. Direct spark ignition
    - D. Flame proving sensor
    - E. Post shut off air purge 4 Min.
    - F. Automatic shut off on loss of flame or air flow
    - G. Leaky gas valve
    - H. Automatic retry on flame loss
    - I. Automatic reset on flame safeguard control
    - J. All flame safeguard controls CSA listed.
30. All components mounted and wired within main unit – no external wiring required except for remote control, indications and optional snow detectors.
31. Galvanized case constructed of 14-gauge steel, high temperature baked enamel finish.
32. Convenient panel access to high efficiency burner, flame sensor and spark igniter.
33. Galvanized steel adjustable mounting foundations.
34. Standard ductwork: 1.5’ flame duct with 2.5’ straight insulated flexible duct and heavy duty insulated offset duct connects to main tie duct electrically insulated between rails, 24 inch (minimum) switch point nozzles.

The following items are recommended for use with propane gas service:

Tank "pigtail" with POL/POL fittings (P/N 45038-12” or 60127-36”)
High pressure regulator (P/N 45103)
Gas line strainer (P/N 45040)
Remote solenoid valve (P/N 45036) OR
Complete Propane Package (P/N 9458-0100)

II. COMPONENT DESCRIPTION

A. MAIN HOT AIR BLOWER (HAB) UNIT

1. **MAIN CIRCUIT BREAKER:** Provides main over-current protection and manual on-off control of electrical power.

2. **MOTOR CONTACTOR:** Provides automatic blower motor control, with high current contacts.

3. **MOTOR OVERLOAD RELAY:** Protects the blower motor from an over-current condition.

4. **CONTROL MODULE:** Provides complete control of operation. See separate description and details, section IV.

5. **CONTROL TRANSFORMER**: Provides control power for the control module and other control components. The multi-tapped secondary provides, 36VAC CT and 17VAC CT. The primary has 115VAC input plus a 230VAC step-up winding and 12.6 VAC CT windings.

6. **IGNITION TRANSFORMER:** Provides 10000VAC to the spark igniter during the ignition sequence.

7. **AIRFLOW SWITCH:** Located in the flame duct, the sail switch indicates proper airflow before and during burner operation. The differential setting is determined by elevation.

8. **BURNER:** Contains the actual flame. Also holds the spark igniter and the flame-sensing rod.

9. **PROPANE/NATURAL GAS ORIFICE PLATE:** Controls the rate of flow of gas to the burner.

10. **SPARK IGNITER:** The spark plug type igniter provides spark for the burner. The spark igniter is momentary - sparks only until the flame has been established.

11. **FLAME DETECTION ROD:** The flame detection rod monitors the flame at the burner nozzle using the rectification principle. This provides a low-level signal to the control module if a proper flame exists.

12. **AIR TEMPERATURE SENSOR:** This is an analog type sensing circuit to monitor the ambient air temperature.

13. **RAIL TEMPERATURE SENSOR:** This is an analog type sensing circuit to monitor the actual rail temperature.

14. **GAS VALVE:** This is an electric solenoid valve which controls the flow of gas for burner operation. It is controlled directly from the control module.

15. **BLOWER MOTOR:** The 5HP 3450RPM motor is totally enclosed and fan cooled.

16. **BLOWER:** The high efficiency blower wheel provides up to 3600CFM airflow. It is dynamically balanced for smooth and quiet operation.

17. **BUZZER:** The buzzer will sound a 10-second tone immediately before the motor contactor is energized.

B. STANDARD DUCTWORK

1. **HEAT DUCT:** The first section of ductwork attached to the main HAB unit. This duct contains the burner, air flow switch, spark igniter and the duct pressure sensor.

2. **FLEX DUCT:** Connects the heat duct to the offset duct. It is a section of flexible duct, 30” long, enclosed in an insulated sheet metal wrapper.

3. **HEAVY DUTY OFFSET DUCT:** Connects the flex duct to the tie outlet duct. This duct provides an 8” offset and encloses the air mixer.

4. **TIE OUTLET DUCT:** The outlet duct extends under the rails in place of a tie and directs the airflow to the point nozzles and track ducts. The rail attaches to the duct using tie plates and E clips. The tie plates are electrically insulated from the rail using an insulating kit. There are six openings in the top for point nozzles and track duct nozzles. Refer to drawing 9528-4805 and 963N32902 for the duct layout.

5. **TRACK DUCTS:** These ducts rest on brackets on the ties and the outlet duct. They are installed over the track duct nozzles. The track ducts consist of a 5’ point, a 5’ mid, and 10’ sections to complete the desired length.

6. **TRACK DUCT NOZZLE:** Attaches to the inner two rectangular openings on the top of the outlet duct. Directs airflow down the length of the switch through the track ducts.

7. **TRACK DUCT NOZZLE ISOLATING KIT:** This is an electrically insulating gasket with insulating washers and hardware to provide isolation between the nozzles and the outlet duct. Refer to drawing 9278-0027 for proper installation.

8. **QUICK CHANGE NOZZLE PLATE:** This plate allows for quick removal or installation of nozzles to the tie duct, by simply loosening of four bolts the nozzle assembly can be removed or installed.

9. **TRACK DUCT SUPPORT BRACKET:** These brackets are used to secure the track duct in position. Refer to drawing 92774.

10. **SWITCH POINT NOZZLE:** These nozzles direct heated air down the switch point. They are mounted on the outlet duct. They can be adjusted for proper airflow direction. Nozzles may be shortened by up to 10" for proper fit.

11. **POINT NOZZLE ISOLATING KIT:** This is an electrically insulating gasket with insulating washers and hardware to provide isolation between the nozzles and the outlet duct. Refer to drawing 9278-0021 for proper installation.

C. OPTIONAL DUCTWORK

1. **EXTENSION DUCTS:** Extension ducts of various lengths are available to meet specific requirements. These are insulated and enclosed in a metal wrapper. Make sure the duct is mounted in the correct orientation, as there is an access opening underneath the insulating wrapper cover. If additional duct extensions are required, this assembly can be added between the outlet duct and the offset duct.

2. **7' TRACK DUCT:** These track ducts are seven feet long. They are often mounted outside of the track near the switch machine. A kit is available (P/N 9278-0270) that includes a 7' track duct, a track duct nozzle and a track duct isolation kit.

OTHER DUCTWORK ASSEMBLIES ARE AVAILABLE. CONSULT THE FACTORY FOR SPECIAL DUCTWORK NEEDS.

(INTENTIONALLY LEFT BLANK)

III. INSTALLATION

INSTALLATION SHOULD BE DONE IN THIS ORDER:

A. TIE DUCT OUTLET DUCT/OFFSET DUCT
B. MAIN HAB UNIT/FLEX DUCT
C. POINT NOZZLES AND TRACK DUCTS
D. GAS
E. CHANGING THE GAS ORIFICE
F. ELECTRICAL

PLEASE READ THROUGH THE ENTIRE INSTRUCTIONS BEFORE BEGINNING INSTALLATION.

A. TIE DUCT

1. Remove the appropriate tie. Choose the tie that will result in the point nozzles being as close to the switch point as possible without interfering with normal switch operation. The distance from the center of the tie duct to the end of the point nozzles is 33”. If necessary, up to 10” may be cut off each point nozzle.

2. Remove sufficient ballast to provide at least 14” clearance from the bottom of the rails.

3. Carefully slip the tie duct under the rails and position it so that the rails are directly above the tie plates. Ensure that the tie duct is centered between the adjacent ties.

4. Place a rubber pad on the tie plate, then using a suitable lever, raise one end of the tie duct until the rail lies correctly on the pad on the tie plate. Place two e-clip insulators, one on each side of rail, in place and then fasten the rail to the tie plate using two of the four 927248 rail clips. Use a heavy hammer or maul to drive the clips securely into place.

5. While keeping the tie duct supported in place, firmly pack ballast under the tie duct from the rail out to the end.

6. Repeat steps 4 and 5 for the other end of the tie duct.

7. a. Remove the end flange plate nearest the HAB by loosening the six retainer bolts.
   b. Install the two-foot heavy duty offset duct (P/N 9278-3403) to the tie duct using hardware and gasket supplied with the offset duct.

8. Firmly repack ballast under the entire tie duct.

B. BUNGALOW PLACEMENT

1. Attach the 2’ flex duct (P/N 9528-5222) to the flame duct using the bolt and gasket kit from the flame duct.

2. Attach the 2’ offset duct (P/N 9528-3103) to the flex duct on the flame duct, using the bolt kit from the offset duct.

3. Position the bungalow to line up with the 2’ heavy duty offset duct and the 2’ flame duct (Refer to Drawing #963N32902).

4. Connect the heavy duty offset duct to the offset duct using the bolts and gasket provided with the offset duct, and level the bungalow.

5. Adjustable Air Intake. To start the GHAB in a new location, set the intake screen in the closed position. If there proves to be a moisture problem where frost builds up on the intake screen, the screen can be set in the open position to improve the air intake to the GHAB.

6. The airflow switch differential setting is factory set on “D” which is for elevations below 2000 ft. If your location is set at a higher elevation, this differential setting will need to be adjusted. Adjust per the following instructions:

   a) Remove the galvanized cover over the airflow switch.
   b) Remove the cover from the airflow switch.
   c) Adjust the differential wheel on the base of the airflow switch as follows:

      Below 2000 ft elevation, set Airflow Differential Wheel to “D”
      Below 4000 ft elevation, set Airflow Differential Wheel to “C”
      Below 6000 ft elevation, set Airflow Differential Wheel to “B”
      Above 6000 ft elevation, set Airflow Differential Wheel to “A”

C. POINT NOZZLES AND TRACK DUCTS

REFER TO DRAWING 963N32902 FOR TRACK DUCT AND POINT NOZZLE POSITIONS.

1. Attach switch point nozzles to the openings in the outlet duct. Position nozzles for proper airflow direction. Instructions are included in the isolation kit (P/N 9278-0021) used with the point nozzles.

2. Attach track duct nozzles to the outlet duct, observing airflow direction. Refer to instructions included with the isolation kit (P/N 9278-0027).

3. Assemble the individual track duct sections into two complete track duct sections. The mid and heel sections contain splices wrapped around the outside of the duct. Unhook the clips to remove the three cover pieces. The bottom can now be removed from the duct.

To assemble the splice:

a. Center the bottom splice piece on the seam between the two track ducts.
b. Connect the center cover piece over the seam. (NOTE: The center cover piece has slots to contain the bolts on the track duct).
c. Finally connect the two end cover pieces.

4. Lay the track ducts on the rail ties alongside where they will be installed.

5. Refer to the drawing 92774. Place the track duct support brackets in position on the ties so that one is near the heel end and one near each joint. Use the lag bolts to fasten the brackets in place. Lay the track duct on the bracket bases. Place the hold-down straps over the track ducts. Attach the hold-down strap to the track duct support brackets by inserting the spring clip into the strap.

6. Push in the square knockouts in the track ducts where airflow is desired. The knockout should be pushed in and bent completely so that no portion of the knockout obstructs the airflow in the duct. Knockout tabs that are not bent back completely will obstruct the airflow as it moves through the track duct resulting in reduced air pressure and airflow further along the track duct.

7. Inspect the track duct nozzles for proper operation. The damper plate should rotate without binding. Ensure that the damper plate is in the proper position, then tighten the locking nut. Ensure that the damper plate is locked firmly in place.

D. GAS CONNECTION

CAUTION

When tightening gas line fittings or components to the HAB unit be sure that you do not rotate the pipe that enters the blower unit. This could cause the gas control valve inside the blower unit to rotate also. Please reference the label attached just above the pipe that enters the blower unit.

1. The following items are available as optional items
   * High pressure regulator (P/N 45103)
   * 36" Gas tank "pigtail" (P/N 60127)
   * 12" Gas tank "pigtail" (P/N 45038)
   * Remote gas valve (P/N 45036)

   NOTE: A propane package is available (P/N 9458-0100) that includes a 36" tank pigtail, high pressure regulator, gas line strainer, gauge, remote solenoid valve in a pole mount enclosure, and a 4X4X8' post.

FOR NATURAL GAS INSTALLATION PROCEED TO STEP 5

2. *Install the copper "pigtail" to the propane tank. Each end of the pigtail is a reverse thread.
3. *Install the high pressure (red) regulator to the pigtail. Remember reverse thread on the pigtail connection.
4. Install the "Y" strainer downstream (but near) the high pressure regulator, or natural gas source.
5. *Install the remote gas valve downstream (but near) the "Y" strainer. Electrical connections from the remote gas valve are made to terminal posts TS1-10 (115vac) and NEUTRAL on the HAB unit. The valve must be mounted with the inlet and outlet horizontal, and the coil upwards.
6. Install adequate size gas pipe from the remote tank location to the main HAB unit. Check with local gas supplier for sizing recommendations.
7. The remaining gas line components are attached to the HAB unit, as shown on drawing R9500-0027. Remember to position the regulator vent fitting facing sideways so that moisture will not enter the regulator.
8. If you are having problems adjusting the gas pressure low enough, the spring in the low pressure regulator must be changed. To change the spring, complete the following steps:

   a. Try adjusting the low pressure regulator for proper fuel pressure. If it can't be adjusted, follow instructions listed below for changing the regulator spring.

   b. Turn power off and close manual gas valve.

c. Remove the plug on top of the regulator.

d. Turn the white plug inside the regulator counter-clockwise until it can be removed.

e. Replace the violet spring with the red spring provided in the gas accessory kit.

f. Replace the top plug.

g. Go to gas pressure menu to adjust.

h. Turn the manual gas valve to “ON” position and turn power on.

i. Place the AUTO/OFF/FORCE switch (SW1) in the “FORCE” position.

j. Place the burner control select in the hi-only position.

k. After the 30-second pre-purge period, the unit will ignite. Check the gas pressure display. Adjust the white plug in regulator until the display reads 11” water column for propane or 7” water column for natural gas. NOTE: Clockwise to increase pressure, counter-clockwise to decrease pressure.

l. Let the GHAB run for a 10 minute period.

m. After the 10 minute period, take temperature readings at both point nozzles.

n. Determine the ambient temperature at the location and subtract the ambient temperature from the point nozzle reading. This temperature should not exceed 250˚F for optimum efficiency.

o. If the temperature is above 250˚F, adjust the gas pressure at the low pressure regulator down (1” w.c. at a time) until you reach the desired temperature.

p. Replace the top plug.

* OPTIONAL ITEMS AVAILABLE FROM RAILWAY EQUIPMENT CO.

(INTENTIONALLY LEFT BLANK)

E. CHANGING THE GAS ORIFICE

1. This unit uses an orifice plate instead of individual orifices. The orifice plate contains the orifices for both propane and natural gas for both stages of operation.

CAUTION

2. Make sure the main circuit breaker is in the OFF position and the manual gas valve is closed before working on the HAB unit.

3. Remove the bottom intake cover from the HAB unit.

4. On the right hand side of the gas assembly you will see the orifice plate. The orifice plate has a tab facing out that says NG for natural gas or LP for propane. This will tell you how the unit is currently set up.

5. To change from one fuel to the other:
   a. There are four bolts on each gas coupling plate. You need to fully remove the top two bolts on each coupling plate and you need to back out the bottom two bolts on each coupling plate 1/2 to 3/4 of an inch.
   b. On the inlet manifold (left hand side of the gas assembly) you need to remove the two bolts securing the manifold to the outside of the GHAB.
   c. You can now carefully slide the gas assembly to the left to free the orifice plate.
   d. The orifice plate can be pulled away from the outlet manifold and up and out. NOTE: Take care removing the orifice plate so you don't damage the O-rings.
   e. The orifice plate can now be flipped over for the other fuel and re-inserted in between the gas coupling and outlet manifold. NOTE: Take care replacing the orifice plate so you don't damage the O-rings.
   f. Slide the gas assembly back to the right and insert the top bolts on the coupling plates.
   g. Verify the tab facing out on the orifice plate is now the correct fuel.
   h. Evenly tighten the eight bolts on the coupling plates.
   i. Replace the bolts on the inlet manifold bracket (outside of GHAB).
   j. Re-install the lower intake cover.

6. Turn on power and manual gas valve.

7. Test unit and check regulator adjustment and output temp.

F. ELECTRICAL CONNECTION

1. Power conductors should be brought into the large LB box on the side of the bungalow.

CAUTION

THE 230VAC SUPPLY LINES SHOULD BE SIZED TO ALLOW FOR THE AC MOTOR START-UP CURRENT WHICH IS 128 AMPS. UNDERSIZED CONDUCTORS AND OR LONG WIRE RUNS WILL DAMAGE THE MOTOR.

2. **INCOMING POWER:** The incoming power should be connected directly to the lugs in the main breaker box. The neutral should be connected to the neutral bus. The neutral should be grounded at the source.

3. **GROUND:** The breaker box ground should be tied directly to earth ground.

SPECIAL NOTE: THE CONTROL CHASSIS AND THE REST OF THE MAIN HAB UNIT MUST BE CONNECTED TO GROUND/NEUTRAL. THE RUBBER PAD BETWEEN THE RAIL AND TIE PLATE ALONG WITH THE E-CLIP INSULATORS WILL INSULATE THE MAIN UNIT FROM THE TRACKS.

4. **CONTROL INPUT:** Remote operator control can be provided by a circuit closure applied between terminal posts TS1-1 and TS1-2.

5. **INDICATION:** Reply indication can be done two ways:

   a. Dry contact closure: Terminal posts TS1-3 and TS1-4 will provide a dry contact closure for indication when the unit is operating under remote control.

   b. +24 VDC: Place a jumper between terminal posts TS1-2 and TS1-4. +24 VDC indication is now present on post TS1-3 with common at terminal post TS1-6.

6. **FAIL:** Reply fail can be done two ways:

   a. Dry contact closure: Terminal posts TS1-5 and TS1-4 will provide a dry contact closure for fail when the unit is in a fault mode.

   b. +24 VDC: Place a jumper between terminal posts TS1-2 and TS1-4. +24 VDC fail is now present on post TS1-5 with common at terminal post TS1-6.

7. DUCT WORK OVERTEMP SENSOR (P/N 9338-0356):

a. On the flex duct, remove the two bolts holding down the overtemp sensor cover. Install the sensor into the duct using the two bolts that were removed.

b. Run conduit along duct work back to HAB enclosure; attach connector to enclosure knock out; tighten. (NOTE: Cut conduit to length if needed.)

c. Run wires from sensor into enclosure and plug connector into OVERTEMP (RED) J10 located on the control module.

d. Use five clamps (P/N 60030) to secure conduit to the side of duct work using existing screws.

8. RAIL TEMP SENSOR (P/N 9508-0416)

a. Attach the magnetic sensor to the bottom of the stock rail approximately four feet ahead of the point nozzle.

b. Run wires from sensor into enclosure and plug connector into RAIL TEMP (YELLOW) J11 located on the control module.

IV. CONTROL MODULE

A. DESCRIPTION

The hot air blower control module contains all of the elements and functions necessary for advanced snow melter operation. The unique dual-chip microcomputer has been programmed with logic and timing sequences to provide complete heater control as well as operational control and system interface. Some of the many features included in the control module are:

- Auto-Off-Local selector switch
- Adjustable air temperature setting
- Built-in snow detector (Requires Optional Snow Detector Head)
- Adjustable start-up delay sequence
- Adjustable run timer for timed or continuous operation
- Adjustable snow detect timer for use with optional snow detector
- Operator control and indication
- Remote fault reset
- Audible tone before blower start-up
- Input/output status indication lights:
  - Inputs:
    - Air temperature
    - Remote Control
    - Moisture Detector One or two snow detector(s) (Optional)
    - Airflow switch
    - Flame Sensor
    - Rail Temp Sensor
    - High Temp Sensor
  - Outputs:
    - Blower motor
    - Ignition spark
    - External Gas Valve
    - Hi Gas valve
    - Low Gas valve
    - Indication
    - Fail
  - Flame safety control:
    - 10 second tone before blower turn on
    - Air flow proving
    - 30 second pre-purge before ignition
    - Direct spark ignition
    - 10 second maximum ignition period before lock-out
    - Rectification type flame rod sensor
    - Automatic retry on flame loss
    - 4 minute post-purge period after gas valve turn-off

Automatic reset
Fault if flame does not go out after gas valve is commanded off

B. SET-UP AND ADJUSTMENTS: To change settings and adjust times do the following:

Mode Up Push Button

Pushing the Mode Up push button (PB2) will cycle up through the menus. Each time you press the mode up push button you will advance one menu selection.

Mode Down Push Button

Pushing the Mode Down push button (PB3) will cycle down through the menus. Each time you press the mode down push button you will move down one menu selection.

Increase Values

The Increase Values push button (PB4) allows you to increase the values.
NOTE: Values will be saved.

Decrease Values

The Decrease Values push button (PB5) allows you to decrease the values.
NOTE: Values will be saved.

The following is the layout of the controller menu:

Controller Menu

The controller has 6 menus categories, they are:

1. Status
2. Fault History
3. Set Points
4. Factory Defaults

Menu Selection

To select the desired menu, press the Mode Up or Down button until *****MENU SELECT***** is displayed, on line 1, and then use the Increase or Decrease Value button to select the appropriate menu. Once the appropriate menu is selected, use the Mode Up or Down buttons to view the contents of the menu.

NOTE: Use the Increase or Decrease Values button to change setpoint values.

STATUS MENU

1. **OUTSIDE TEMP AND PRESET VALUE**
   Displays the current ambient temperature and temperature preset value. If ambient temperatures is below the preset value, the unit will start if requested.

2. **MOTOR CURRENT AND MOTOR VOLTAGE**
   Motor current displays the actual motor current in amps while motor is running. Motor voltage displays the actual motor voltage in volts while motor is running.

3. **GAS PRESSURE AND DUCT PRESSURE**
   Gas pressure is the actual differential pressure at the burner. The unit of measure is inches of water (“H2O). To view gas pressure, the burner should be burning. The correct setting should be 11“H2O for propane, be 7“H2O for natural gas. While adjusting, the burner should be in high only. Adjust regulator to change gas pressure value. Duct temperature is the actual duct temperature in degrees F or C.

4. **FLAME CURRENT**
   Flame current displays the actual flame current in micro amps while a flame is present.

5. **RAIL TEMP AND DUCT TEMP**
   Rail temperature is the actual rail temperature in degrees F or C. Duct temperature is the actual duct temperature in degrees F or C.

6. **AC FREQUENCY**
   Displays the frequency of the line voltage.

7. **TOTAL GAS AND RESET GAS**
   Total gas displays the calculated amount of gas that has been used. The unit of measure is gallons if propane is selected. The unit of measure is cubic feet if natural gas is selected. Reset gas is the same as total gas except it can be reset. To reset, press the decrease value button.

8. **HOUR METER AND RESET HOUR**
   Hour meter displays the total hours that GHAB has been running. Reset hour is the same as hour meter except it can be reset. To reset, press the decrease value button.

9. **TANK LEVEL, BAT AND TEMP**
   Tank level displays the actual level of propane tank in percent full (optional tank level monitor must be installed). Bat displays the battery level of the tank monitor. Temp displays the temperature in the battery monitor.

FAULT HISTORY MENU

NOTE: Some faults may not show in Fault History until there is an actual fault.
Press the decrease or increase value button to reset fault count.

1. **FLAME LOSS AND FLAME ON**
   Flame loss counter is total count of flame loss faults. Flame on counter is total count of flame on faults.

2. **SAIL LOSS AND SAIL ON**
   Sail loss counter is total count of sail loss faults. Sail on counter is total count of sail on faults.

3. **MOTOR V FAULT AND OVERLOAD**
   Motor volts low or high counter. Overloads counter is total motor overloads faults.

4. **GAS VALVE LEAK AND PRESSURE FAULT**
   Gas valve counter is total count of leaking gas valve faults. Gas pressure low or high counter.

5. **DUCT PRESS FAULT AND VAP. PRESS LOW**
   Duct pressure fault counter is total count of duct pressure faults. Vaporization low fault counter is total count of vaporization low faults.

6. **MOTOR CURRENT AND COMM RESET**
   Motor current fault is total count of motor current faults. Comm reset fault is total count of communication reset faults.

7. **DAY COUNTER AND POWER UP**
   Day counter is the number of days the unit has been powered up. Power up counter is the total number of times the control module has been turned on.

8. **OVER TEMPS WARNING COUNTER**
   Counts the total number of Over Temp warnings.

9. **AUTO OVERTEMP RESET COUNTER**
   Counts the total number of times the Over Temp was reset.

SET POINTS MENU

1. USER LEVEL

The options are BASIC and ADVANCED.

Basic – access to basic menus.

Advanced – access to advanced menus (requires password).

2. PASSWORD

A password is needed to access the advanced menus. To enter in the password, use the increase or decrease value buttons. Password 5 allows advanced menu items to be changed.

3. SELECT TEMPERATURE SETPOINT

The ambient temperature below which the unit will energize is set on this screen. When the outside temperature is below this setpoint, the unit will be allowed to operate if requested. The factory default is 38° F (3° C). The range is from 0° F to 100° F (-18° C to 38° C).

4. SELECT RUN TIMER VALUE

The run timer can be set from 0 to 1000 minutes. If zero is selected, the outputs will operate continuously, until control on is disabled. If another value is selected, the unit will run until the run timer counts down to zero, after which the unit will shut down and drop indication. The unit can be restarted by removing the contact closure between TB2-1 and 2, then reinstalling it. If Run Timer Pulse Mode is activated, the minimum run time value is 10 minutes. The factory default setpoint is 60 minutes.

5. RUN TIMER PULSE MODE

The choices are on or off, factory default is off. When on is selected, a pulse will start run time sequence and continue until run timer has timed out. When off is selected, run timer will time out as long as remote is on. When remote on is removed blower will stop.

6. SELECT SNOW TIMER VALUE

The snow timer can be set from 10 to 1000 minutes. The snow time starts counting down when the moisture detector no longer sees snow. The factory default setpoint is 60 minutes.

7. SELECT SNOW SENSOR SPEED

Snow sense speed sets the delay time after the moisture detector sees moisture and starts the snow cycle. The delay time can be set from 1 to 60 seconds. The moisture sensor must see moisture for entire time to start cycle.

8. SELECT SNOW INDICATION

The choices are OFF or ON. With snow indication off, indication will remain off during snow time if no faults are present. With snow indication on, indication will remain on during snow time if no faults are present.

9. SELECT START DELAY VALUE

The start delay timer can be set from 0 to 250 seconds in 10 second increments. It is used to delay the start of GHAB so when several blowers are at the same location they do not start at same time.

10. SELECT BURNER OPERATION

The choices are LOW, HIGH, AUTO, AUTO OFF.

Hi Only – 100% BTU output with or without Rail Sensor.

Low Only – 50% BTU output of Hi with or without the rail sensor.

Auto – Switches between high and low dependant on the rail & duct temperature sensor and setpoint. Note: If no rail sensor is connected, it will run at low (50% output). Units with only single stage installed, should select high only.

Auto Off – When rail temperature reaches the rail temp setpoint, the GHAB will shut down. When the rail temperature lowers to the ambient temperature setpoint, the GHAB will start again.

11. OPERATION MODE

The choices are NATURAL, PROPANE, COLD AIR, COLD AIR/PROPANE, COLD AIR/NATURAL.

NATURAL – The GHAB's burner is fueled by natural gas.

PROPANE – The GHAB's burner is fueled by propane.

COLD AIR – The GHAB will turn its blower on with air temperature. It will not use a burner.

COLD AIR/PROPANE –The GHAB will turn its blower on with air temperature. It will then turn its propane burner on with moisture or control.

COLD AIR/NATURAL –The GHAB will turn its blower on with air temperature. It will then turn its natural gas burner on with moisture or control.

12. SELECT MOTOR SIZE

The choices are:

2 HP 230V 1PH, 3 HP 230V 1PH, 5 HP 230V 1PH,
2 HP 460V 3PH, 3 HP 460V 3PH, 5 HP 460V 3PH,
2 HP 575V 3PH, 3 HP 575V 3PH, 5 HP 575V 3PH,
2 HP 3PH Drive, 3 HP 3PH Drive, 5 HP 3PH Drive
2 HP 230V 3PH, 3 HP 230V 3PH, 5 HP 230V 3PH.

13. RAIL TEMP SETPOINT

This can be set from 0° F to 280° F (-18° C to 138° C).

14. DUCT TEMP SETPOINT
This can be set from 150° F to 250° F (66º C to 121º C).

15. DUCT PRESSURE HIGH SETPOINT
This can be set from 3” H2O to 30” H2O.

16. DUCT PRESSURE LOW SETPOINT
This can be set from 0” H2O to 5” H2O.

17. GAS PRESSURE HIGH SETPOINT
This can be set from 7” H2O to 30” H2O.

18. GAS PRESSURE LOW SETPOINT
This can be set from 0” H2O to 10” H2O.

19. MOTOR CURRENT HIGH SETPOINT
This can be set from 5 to 100 amps.

20. MOTOR CURRENT LOW SETPOINT
This can be set from 0 to 10 amps.

21. MOTOR VOLTAGE HIGH SETPOINT
This can be set from 250 to 650 volts.

22. MOTOR VOLTAGE LOW SETPOINT
This can be set from 150 to 550 volts.

23. AC FREQUENCE HIGH SETPOINT
This can be set from 0 to 100 Hz.

24. AC FREQUENCE LOW SET POINT
This can be set from 0 to 100 Hz.

25. LOCAL WITH/WITHOUT AIR TEMPERATURE
Sets the local feature to, or not to, be dependant on the air temperature.

26. OVERTEMP BYPASS
With overtemp bypass enable, the unit will not fault if the overtemp sensor is missing. This feature is only for use on units that have a two wire overtemp sensor. Current production units are equipped with a four wire overtemp sensor. **NOTE: BYPASSING THE OVERTEMP SENSOR MAY CAUSE HARMFUL OPERATING CONDITIONS.**
The following steps are required to bypass the overtemp sensor:

a) Display: MENU SELECT
SETPOINTS

b) Select: ADVANCED

c) Enter password: 10

d) Display screen: OVERTEMP BYPASS
DISABLED

e) Change to: ENABLED

27. SELECT F OR C
Will change the temperature scale to either Fahrenheit or Celsius.

28. AUTO OVERTEMP RESET
Auto overtemp reset will reset the overtemp once it has been triggered.

29. SELECT TANK SIZE
The choices are no tank sensor, tank heater, 250 gallon increments up to 5,000 gallons. No tank sensor should ALWAYS be selected UNLESS a tank sensor reporting to the module is installed. Note: Tank Size menu is only available if propane is selected.

30. TANK SERIAL #
Tank serial # is the tank level monitor's serial number. This is only used if a tank sensor reporting to the module is installed.

31. MACHINE SERIAL NUMBER
Machine serial # is the serial number of the whole GHAB unit.

32. SERIAL NUMBER/MAC
Shows the MAC address for the unit.

33. AMBIENT OFFSET
Used to calibrate the ambient temperature sensor.

34. RAIL OFFSET
Used to calibrate the rail temperature sensor.

35. DUCT OFFSET
Used to calibrate the duct temperature sensor.

36. PROG REV AND DATE
Shows the program revision and the date it was complied.

37. BOOTLOADER

The choices are DO NOT RUN BOOTLOADER, START FACTORY DEFAULT BOOTLOADER and START NEW CODE.

DO NOT RUN BOOTLOADER – Will not run the bootloader.

START FACTORY DEFAULT BOOTLOADER – Will run the factory bootloader.

START NEW CODE – Will download and run the new code.

FACTORY DEFAULTS MENU

Factory default is used to place all parameters back to factory default settings.

To restore to factory default:

In the menu selection, select FACTORY DEFAULTS and then press either the up or down mode button. Next press either the increase or decrease value button to restore to default.

A**UTO/OFF/LOCAL SWITCH (SS1)**

a) AUTO: This position will allow operation by placing a circuit closure across terminal posts 1 and 2. It will also allow operation by an optional snow detector.

b) OFF: If off, GHAB cannot be run from remote or snow detector.

c) LOCAL: If LOCAL without air temp parameter is enabled, placing SS1 in the LOCAL position enables the snow melter regardless of outside air temperature. The snow melter will remain on until LOCAL is turned off. This is useful for hot weather testing.

C. LED STATUS INDICATING LIGHTS

1 AIR TEMPERATURE:

On when the ambient air temperature is below set point.

2 MOISTURE:

On when the optional snow detector sensing head(s) senses moisture.

3 CONTROL:
On when there is a circuit closure across terminal posts 1 and 2.

4 BLOWER:
On when the controller has turned on the output to the blower motor contactor.

5 AIRFLOW:
On when the sail switch in the air stream is sensing adequate airflow.

6 IGNITION:
On when the controller has enabled the output to the ignition transformer.

7. HIGH GAS VALVE:
On when the controller has enabled the output to the high gas valve.

8. LOW GAS VALVE:
On when the Controller has enabled the output to the Low Gas Valve.

9 FLAME:
On when the flame sensing determines that there is proper combustion.

10. INDICATION:
On when there is a circuit closure across terminal posts 1 and 2 and the unit is operating, or the air temperature is above the set point. Also may be on when there is a fault condition under snow detector.

11. FAIL:
This LED is on when ever a fault is present.

D. OPERATION

With switch SS1 in the “auto” position, the unit can be activated by applying a circuit closure between terminals TS1-1 and 2. If the outside temperature is above set point the unit will not start a snow melt sequence but will turn on the “indication” LED and provide a relay contact closure between TS1-3 and 4 to indicate to the remote station that the unit is operational.

If a circuit closure exists between TS1-1 and 2, and the air temperature is below set point. the unit will begin a snow melt sequence. The unit executes a 0 to 300 sec. time delay depending on the setting of the START DELAY TIMER. Then, a 10-sec. audible tone sounds as a warning that the blower motor is about to turn on.

The airflow switch is checked to see if it is closed. If it is, the blower will display SAIL SWITCH ON FAULT.

If the airflow switch is open the motor will turn on. After the blower motor is turned on, the airflow switch is monitored. It closes if airflow is normal. If it does not close within 10 sec. (or 30 sec. for an AC drive) after blower turn-on, the blower displays SAIL SWITCH OFF FAULT. When the airflow switch closes, a 30 second prepurge time will start. After the prepurge time is completed the gas valve opens, the ignition turns on and the burner is monitored for a normal flame condition. If a flame is not detected within 10 seconds, the gas valve is closed, the ignition spark is removed and the blower displays NO FLAME DETECTED FAULT.

If a normal flame condition is detected the “indication” contact closure is established between TS1-3 and 4. The unit will run for a period of time determined by the setting of the RUN TIMER. If the run timer is set at “0” the unit will continue to run until the circuit closure between TS1-1 and 2 is removed.

If the blower is equipped with the two stage gas valve option and the rail temp sensor is installed, then under normal operation when the rail reaches the preset temperature setting, the low gas valve will open and the high gas valve will close. This will result in a fuel reduction of 50%. When the rail falls below the programmed temperature, the high gas valve will open and the low gas valve will close resulting in the burner returning to 100% capacity.

If the blower is equipped with the two stage gas valve option and the duct temp sensor is installed, then under normal operation when the duct reaches the preset duct temperature setting, the low gas valve will open and the high gas valve will close. This will result in a fuel reduction of 50%. When the duct falls below the programmed temperature, the high gas valve will open and the low gas valve will close resulting in the burner returning to 100% capacity. If the duct temp sensor sees a temperature above 325 ^{o} F (163º C) both gas valves will be disabled. This prevents over temps.

There is a burner control adjustment available in the control module adjustments that allow the burner to be set to high only, low only or automatic controlled by the rail temp sensor. If the two-stage option is not installed, the burner control switch should be set to high only. Refer to (SET UP AND ADJUSTMENTS) in Section IV 8.

SNOW DETECTOR OPERATION. If the unit is operating with one or two optional snow detector assemblies and moisture is detected by either (or both), a snow melt sequence will begin, provided that the air temperature is below the set point. The unit will start as described in Section IV Part B under (Select Snow Timer).

E. FAULT CONDITIONS

1. SAIL SWITCH ON FAULT:

During startup the processor checks the status of the airflow switch. If the airflow switch is closed or shorted the blower motor will turn on and the blower will run a 4-minute purge to try to clear the airflow switch. The motor will then shut off and sit idle for 1 minute. Upon completion of this 5-minute cycle, the blower will once again check the airflow switch for proper operation. If the airflow switch still shows that it is closed it will run the 5-minute loop again. This will repeat until fault is cleared or blower is no longer called for.

2. SAIL SWITCH OFF FAULT:

Sail switch off fault is set when blower is running and air flow switch is open. After the fault is set the blower motor will run a 4-minute purge to try to clear the airflow switch. The motor will then shut off and sit idle for 1 minute. Upon completion of this 5-minute cycle, the blower will once again check the airflow switch for proper operation. If the airflow switch still shows that it is open it will run the 5-minute loop again. This will repeat until fault is cleared or blower is no longer called for. Check to see if the sail switch is free to move and if there are any obstructions in duct work.

3. NO FLAME DETECTED FAULT:

No flame detected fault is set when blower is running and air flow switch is closed with gas valve open. If no flame is detected within 10 seconds the fault will be set. After the fault is set the blower motor will run a 4-minute purge to try to clear the flame rod. The motor will then shut off and sit idle for 1 minute. Upon completion of this 5-minute cycle, the blower will once again check the flame rod for proper operation. If no flame is present it will run the 5-minute loop again. This will repeat until fault is cleared or blower is no longer called for. Check to see if the flame rod is shorted to ground, the flame rod is loose, the flame rod is dirty or if the insulators is fully installed so that no moisture can short out the flame rod.

4. FLAME DETECTED ON FAULT:

Flame detected on fault is set when blower is running and air flow switch is closed with gas valve closed. If flame is detected before gas valve is opened the fault will be set.

After the fault is set the blower motor will run a 4-minute purge to try to clear the flame rod. The motor will then shut off and sit idle for 1 minute. Upon completion of this 5-minute cycle, the blower will once again check the flame rod for proper operation. If flame is present with gas off it will run the 5-minute loop again. This will repeat until fault is cleared or blower is no longer called for. Check to see if the flame rod is shorted to ground, the flame rod is loose, the flame rod is dirty or if the insulators is fully installed so that no moisture can short out the flame rod.

5. GAS VALVE FAILURE:
During the blower shutdown operation if the unit senses flame after the post-purge, the unit will not shutdown. Instead it will go into gas valve failure mode. In this mode the blower continues to run, the reply will also indicate a problem, and the buzzer will sound. The unit will lock out all other operations and will not be able to be reset except at the unit itself.

6. CHECK FUSE # 1 24 VDC POWER:
Fuse # 1 is tripped. Check the following circuits:

a. Overtemp switch and wiring.
b. Check TS1-2 +24 control on wiring.

7. CHECK FUSE # 2 IGNITION TRANSFORMER:
Fuse # 2 is tripped. Check the following circuits:

a. Ignition transformer and wiring.

8. CHECK FUSE # 3 GAS VALVE / SAIL SWITCH:
Fuse # 3 is tripped. Check the following circuits:

a. Check Sail switch and wiring.
b. Check hi and low gas valve and wiring.
c. Check external gas valve and wiring.

9. CHECK FUSE # 4 BLOWER MOTOR:
Fuse # 4 is tripped. Check the following circuits:

a. Check blower motor contactor and wiring.

10. CHECK FUSE # 6 SNOW HEAD # 1:
Fuse # 6 is tripped. Check the following circuits:

a. Check snow detector head # 1 and wiring.
b. Check Gas pressure sensor and wiring.
c. Check Duct pressure sensor and wiring.

11. CHECK FUSE # 7 SNOW HEAD # 2:
Fuse # 7 is tripped. Check the following circuits:

a. Check snow detector head # 2 and wiring.
b. Check Sail switch and wiring.

12. CHECK FUSE # 9 ANALOG 5VDC:
Fuse # 9 is tripped. Check the following circuits:

a. Check 5V supply for pressure sensor.

13. CHECK FUSE # 10 PRESSURE/BAT CHARGER:
Fuse # 10 is tripped. Check the following circuits:

a. Check pressure sensor.
b. Check 24V supply for battery backup.

14. OVERTEMP FIX PROBLEM PRESS DECREASE:
Overtemp sensor has tripped. If the temperature inside the Tie duct exceeds 375 degrees F, it will cause the ductwork overtemp circuit to trip, shutting down the HAB system. Only pushing the decrease value push button will reset the unit, giving opportunity to check the cause of the overtemp condition.

15. OVERTEMP FIX PROBLEMPRESS DECREASE ___ MIN:
The overtemp sensor has tripped. The HAB system will shut down for some time period then it will reset the unit. NOTE: AUTO OVERTEMP RESET must be enable in order to see this fault.

16. OVERTEMP WARNING RESTART IN ___ SEC:
If the temperature is close to overtemp value, the unit will restart in a certain time period.

17. OVERTEMP MISSING INSTALL OVERTEMP:
Caused my missing overtemp sensor.

18. MOTOR VOLTAGE LOW:
Motor voltage low is caused by inadequate electrical service supply. During motor start up if motor voltage drops below 190 VAC, the motor will eventually be damaged. If this under-voltage occurs, an error will be set. Press decrease value button to clear the fault.

19. MOTOR VOLTAGE HIGH:
Motor voltage high is caused by high motor voltage. Can be caused by high voltage from the electric company.

20. MOTOR OVERLOAD, RESET OVERLOAD DEVICE:
High motor current will trip the motor overload on the control panel. This device is connected to the bottom of the motor contactor on the control panel. Reset by pressing the red button on the device. Check unit for high motor current, bad bearings, or obstructions in the blower wheel.

21. MOTOR CURRENT LOW:
Caused by low motor current.

22. MOTOR CURRENT HIGH:
Motor current high is caused when sensed current is 3 amps over motor name plate for 20 seconds. Check motor for high current, bad bearings, obstruction in blower wheel.

23. GAS PRESSURE LOW:
Gas pressure low is caused by supply gas pressure during operation dropping to a low level. Check gas delivery system.

24. GAS PRESSURE HIGH:
Gas pressure high is caused by high gas pressure going to the burner. Check gas delivery system. Adjust the regulator on the gas delivery system to lower the gas pressure.

25. DUCT PRESSURE LOW:
Duct pressure low is caused by not enough duct back pressure. Possible causes are missing flame cover or missing duct work.

26. DUCT PRESSURE HIGH:
Duct pressure high is caused by too much duct back pressure. Possible causes are duct work obstructions

27. PROPANE TANK LOW WARNING FILL TANK:
Propane tank low is caused by low propane tank level. Note propane tank level monitor must be installed and setup, for this warning to appear.

28. TANK VAPORIZATION PRESSURE LOW WARNING:
Tank vaporization pressure low warning is caused by low tank temperatures.

29. UTILITY POWER LOST:
Utility power lost is caused by no incoming AC voltage. Must have a battery backup in order to receive this fault.

(INTENTIONALLY LEFT BLANK)

V. SEASONAL MAINTENANCE

A. SPRING:

1. Turn off gas source.
2. Turn off electric power at source.
3. Disconnect and remove the control module. Store in a clean, dry place.
4. Turn off manual gas valve.

B. FALL

1. Check all ductwork for clear airflow. Ensure that the point and track duct nozzle screens are not damaged and are completely covering the openings. Make sure that no debris or rodents have obstructed any area of the ductwork.
2. Inspect the track duct nozzles for proper operation. The damper plate should rotate without binding. Ensure that the damper plate is in the proper position, then tighten the set screws and locking nut. Ensure that the damper plate is locked firmly in place.
3. Remove the flame duct cover. Check the burner. Make sure the spark igniter plug and flame rod are in good, clean condition. Check the wiring to make sure rodent or vibration have not damaged the insulation.
4. Check the airflow sail switch to make sure it is operating properly.
5. Replace the flame duct cover.
6. Install the control module and connect the wires.
7. Turn on the gas source.
8. Turn on the manual gas valve.
9. Turn on the electric power at source.
10. Perform the gas pressure regulator adjustment procedure as described on the following page of this manual.
11. Perform a flame failure test:
    a) Place switch SS1 in the FORCE position.
    b) Turn off the manual gas valve.
    c) Turn on the main circuit breaker.
    d) After 40 seconds (plus any start delay period) the fault message NO FLAME DETECTED FAULT should be displayed. If the fault does not appear, the control module is faulty and should be replaced.
12. Check the flame current. Refer to Section IV, Control Module (B), SET-UP AND ADJUSTMENT 18A.
13. Check the air temperature for proper setting.

VI. LOW PRESSURE REGULATOR ADJUSTMENT/OUTPUT TEMP TEST

A. Place switch SS1 in the FORCE position.

B. Turn the manual gas valve to “ON” position and turn power on.

C. Place the burner control in the hi-only position. Refer to Section IV SET-UP AND ADJUSTMENTS b. 7.

D. After the 30-second pre-purge period, the unit will ignite. Check the gas pressure value. Adjust the white plug in regulator until the gauge reads 11” water column for propane or 7” water column for natural gas. NOTE: Clockwise to increase pressure, counter-clockwise to decrease pressure.

E. Let the GHAB run for a 10 minute period.

F. After the 10 minute period, take temperature readings at both point nozzles.

G. Determine the ambient temperature at the location and subtract the ambient temperature from the point nozzle reading. This temperature should not exceed 250˚F for optimum efficiency.

H. If the temperature is above 250˚F, adjust the gas pressure at the low pressure regulator down (1” w.c. at a time) until you reach the desired temperature.

I. Replace the top plug.

J Return all switches to their normal operating position.

VII. TROUBLESHOOTING

A. UNIT DOES NOT START

1. Check circuit breaker.
2. Check control fuse. The control fuse is an auto resettable type fuse. To check, turn the main circuit breaker off for one minute, then turn back on
3. Check for 18VAC between the following points:
   TS1-6 and TS1-7
   TS1-6 and TS1-8.
   Change T1 control transformer if either measurement is incorrect.
4. Check for air temperature below set point.
5. Is the control module programmed for a start-up delay?
6. Monitor the fault display on the control module.
7. Turn the circuit breaker off, then reset the motor overload relay. The motor overload relay is adjustable. It should be set for the motor name plate current.
8. Push the RESET Button (PB1).

B. UNIT DOES NOT MAINTAIN OPERATION

1. Monitor the flame current as described in section IV B. 18.
2. Check the fuel supply. Refer to Section VID.
3. Check 230VAC and 115VAC from either leg to the center tap neutral (with the unit running). It must be within +10% to -10%.
4. Check the burner. The burner must be clean and free of carbon.
5. The flame rod should be clean and secure. Refer to section D for flame current test.
6. Check the wire from the flame rod to the control module for continuity. Pull the white plug connector on the lower right side of the control module. Use an Ohmmeter to measure continuity from the terminal of the flame rod to the white connector. The reading should be less than 1 ohm.

C. LOW HEAT LEVEL

1. Perform a regulator adjustment/output temp test refer to Section 5.
2. Check the fuel supply.
3. Make sure the burner is clean.
4. Make sure the orifice plate is installed for the fuel being used.
5. Check the low pressure regulator.
6. Check to see if the burner control is on low only or if it is in auto and the Rail Temp Sensor setting is forcing it to low output.

D. LOW AIRFLOW

1. Check for obstructions in all ductwork and the air intake.
2. If there is frost buildup on the air intake screen, move the screen to the "open" position.
3. Check the voltage and current levels on the blower motor.
4. Make sure knockouts on the track duct are pushed all the way back in the track duct.
5. Check the spacing between the inlet cone and the blower wheel. The gap should be less than 1/16 of an inch.

E. GAS VALVE

CAUTION

CHECK THE AREA TO BE SURE THERE ARE NO LINGERING GAS FUMES BEFORE DOING ANYTHING WHICH MAY CAUSE A SPARK!

1. Turn off gas to the blower.
2. Turn off power to the blower.
3. Check the gas valve for obstructions.
4. Check the gas valve for proper operation.

F. HIGH HEAT LEVEL

1. Check for proper orifice installation.
2. Perform the low pressure regulator and Temp Test found in Section VI.

VIII. SNOW DETECTOR

A. SNOW DETECTOR INSTALLATION

1. The snow detector sensing circuitry is contained within the control module. All that is required for snow detector operation is to connect the sensing head(s).

2. Either one or two sensing heads may be used.

3. Each sensing head has three lead wires; black, white, and green. Connect as follows:

   a) green: one or both connected to TS1-6.
   b) black #1: connected to TS1-7.
   c) black #2: connected to TS1-8.
   d) white: one or both connected to TS1-9.

   NOTE: Refer to the diagrams when connecting wires for the sensing heads. It is important to properly connect the sensing head wires. Improper connection of the sensing head wires may result in damage to the control module and/or the sensing head.

4. To operate more than one HAB unit from a HAB unit that is controlled by a snow detector(s), connect terminal posts #6 together and terminal posts #9 together. (Do not connect terminal post #6 to terminal post #9.) When connecting snow detectors to more than one HAB unit, first connect one HAB. Then connect the snow detector to one more HAB. If the snow detector does not operate properly, exchange L1 and L2 on the newest HAB circuit breaker. NOTE: BE SURE L1 AND L2 ARE DE-ENERGIZED BEFORE EXCHANGING THEM. Continue to add HABs to the snow detector in the same manner until all the desired HABs are connected. DO NOT EXCEED 200’ CABLE LENGTH (18 AWG WIRE).

5. The sensing heads should be mounted in a vertical position.

6. Experience has shown that positioning a snow detector sensing head in the switch area between the ties and between the switch point and the track duct is effective. A second sensing head is then placed away from the switch area, such as on a bungalow or pole.

B. SNOW DETECTOR OPERATION

NOTE: A snow detector sensing head only detects moisture. With temperature sensing capability, the HAB unit assumes moisture is due to snow when the air temperature is below set point.

All operating functions are similar to remote operation with the following exceptions:

1. INDICATION: During normal operation under snow detector control, the indication contact across terminal posts 3 and 4 will not be closed.

2. TIMED OPERATION: The snow detector has many different time scenarios . Refer to Section IV Part B to determine which scenario best meets the needs in your location.

3. RUN TIMER: During remote operation, if the snow detector senses moisture, the unit will operate according to the settings. The unit will then operate for the duration of the run timer setting.

4. FAULT CONDITION: A fault condition under snow detector control will cause the indication contact across terminal posts TS-3 and TS-4 to close. To reset the unit after a fault condition, momentarily apply a circuit closure between terminal posts TS-1 and TS-2 with Ss1 in the Auto position. The unit may now be operated either under remote control or snow detector control.

C. SNOW DETECTOR MAINTENANCE

The snow detector sensing head contains a small, self-regulating heater that will melt snow or ice into water. The sensing head relies on moisture to create a low resistance circuit path. The heater will also cause the moisture to evaporate within a short period. If the surface becomes non-conductive due to contamination by grease or oil, the sensing head will not operate. To ensure effective and dependable snow detector operation, it is important to inspect the sensing heads frequently and clean them thoroughly if necessary.. Use a solution of water and mild detergent or isopropyl alcohol to clean the sensing grid. Use a clean, dry cloth to wipe the grid. Make sure there is no residue left on the surface.

D. SNOW DETECTOR TROUBLESHOOTING

NOTE: A newly-installed snow detector sensing head should operate 15-20 minutes to allow the internal heater to reach normal operating temperature.

1. NO HEAT ON THE SENSING HEAD

a. Check for voltage between terminal post 6 and 7, and between terminal post 6 and 8. It should be 18VAC 2VAC. If not:

(1) Check the display on the control module.
(2) The control transformer may be defective.
(3) There may be a bad circuit connection.

b. Remove the black and the green lead wires from the terminal posts. Check resistance between them. If resistance is greater than 10 ohms, the sensing head is defective and should be replaced.

2. DOES NOT DETECT MOISTURE

a. Clean the snow detector as described above.

b. If unit still does not detect moisture, check the wiring connections between detector head and terminal posts.

c. If unit still does not detect moisture, replace the control module with a known good control module. If still not operating properly, replace the sensing head.

NOTE: If a snow detector head becomes saturated with moisture, it can sometimes be restored to normal operation by removing it and “baking” it in a conventional oven for several hours. Do not exceed 150 F.

3. CONSTANT INDICATION OF MOISTURE DETECTION

a. Clean and adjust the snow detector heads as described in section C, Snow Detector Maintenance.

b. Remove white lead(s) from terminal post 9. If moisture indication is still on, the control module is defective and should be replaced.

IX. SPECIFICATIONS

VOLTAGE :	230VAC, 1PH 60 HZ, 50 Amp, With 115VAC/115VAC center tap neutral
MOTOR :	5 HP, 3450RPM, TEFC 128 Amp starting current 19.5 Amp running current
VOLTAGE :	230 VAC, 1PH 60HZ 50 AMP (3PH AC DRIVE)
MOTOR :	5 HP, 3450RPM, TEFC 80 Amp starting current 19.5 Amp running current
VOLTAGE :	460/575 VAC, 3PH 60HZ 15 AMP
MOTOR :	5 HP, 3450RPM, TEFC 46 Amp starting current 4.8 Amp running current
AIRFLOW :	3600 CFM
COMBUSTION RATE :	1,000,000 BTU/HR 420,000 BTU/HR
FUEL :	Propane or Natural Gas
FLOW RATE:	Natural Gas: 1,0400 CFH/420 CFH Propane: 400 CFH/168 CFH 11 GPH/4.6 GPH
INDICATION CONTACTS:	30VDC 1A or 125VAC 300mA

X. DRAWINGS

BUNGALOW POSITIONING	963N32902
GHAB SWITCH LAYOUT	9529-0020
BUNGALOW MAIN UNIT	9638-0501
GHAB MAIN UNIT	9538-6115
TIE DUCT ASSEMBLY 136LB E-CLIP	9528-4805
TIE DUCT ASSEMBLY 115LB E-CLIP	9528-4605
POINT / TRACK ASSEMBLY RH	9508-4000
POINT / TRACK ASSEMBLY LH	9508-4001
TRACK DUCT ASSEMBLY LH	9508-4002
TRACK DUCT ASSEMBLY RH	9508-4003
NOZZLE TRACK DUCT ASSEMBLY	927490
ISOLATION KIT, TIE DUCT POINT NOZZLE	9278-0021
ISOLATION KIT, TIE DUCT TRACK NOZZLE	9278-0027
DUCT, FLAME 11 X 12	9608-3126
HEAVY DUTY OFFSET DUCT	9528-3404
2’ INSULATED FLEX DUCT W/MIXER	9528-4222
TRACK DUCT, 5’ POINT	9278-0226
TRACK DUCT, 5’ MID	9278-0227
TRACK DUCT, 10’, MID	9278-1201
TRACK DUCT, 10’, HEEL	9278-1202
SWITCH ROD DUCT 7’	9278-0270
TRACK DUCT SUPPORT BRACKET ASSEMBLY	92774
GHAB ELECT. PANEL LAYOUT 1 PHASE	9528-0150
GHAB ELECT. PANEL LAYOUT AC DRIVE	9538-0156
GHAB ELECT. SCHEMATIC 1 PHASE	9524-0223
GHAB ELECT. SCHEMATIC AC DRIVE	9534-0156
GHAB ELECT SCHEMATIC 3 PHASE	9504-0125
GAS PIPING, 2 STAGE	9638-0138
BURNER ASSEMBLY	9528-0135
GHAB MENU FLOW CHART	

LIMITED WARRANTY

XI.

Railway Equipment Co., Inc. ("Railway") warrants all of its products to be free from defects in material and workmanship when used under specified operating conditions and within specified limits. Railway's warranty shall extend for a period of two (2) years from the date of shipment to the original purchaser.

This warranty is expressly in lieu of and excludes all other expressed or implied warranties, including but not limited to warranties of merchantability and fitness for a particular purpose.

Railway, its agents, or representatives shall in no circumstance be liable for any direct, indirect, special, penal, or consequential loss or damage of any nature resulting from the malfunction of the product.

Remedies under this warranty are expressly limited to repair or replacement of the product at the sole discretion of Railway.

Before returning any defective product to Railway, contact the factory at the address or telephone number at the bottom of this article for a Return Merchandise Authorization number and instructions as to how and where the return is to be shipped. Materials received without this authorization will be returned at the customer's expense.

Products returned to Railway under warranty must be shipped freight prepaid, and return freight charges for repaired or replaced products, in or out of warranty, will be at customer's expense.

Railway reserves the right to reject any warranty claim on a product that has been altered by the user or damaged in shipping due to inadequate packaging or mishandling by freight carrier.

By returning a product to Railway the owner grants permission to Railway to open and disassemble the product as required for evaluation. Railway has the sole responsibility for determining the cause an nature of failure, and Railway's determination with regard thereto shall be final. Railway reserves the right to repair or replace any unit at its sole discretion.

A returned product that is found, upon inspection by Railway, to be operational within specification is subject to an inspection and testing fee, regardless of its warranty period.

Railway's liability on any claim of any kind (including negligence) for any loss or damage arising out of or resulting from this agreement, or from the performance of breach thereof, of from the products or services furnished hereunder, shall in no case exceed the price of the specific product or service which gives rise to the claim. All such liability shall terminate upon the expiration of the warranty period of two (2) years, as hereinabove stated.

The furnishing of advice or other assistance without separate compensation therefor will not subject Railway to any liability, either in contract, warranty, tort (including negligence) or otherwise.

Any alteration or modification of the product, or addition on non-Railway components to the product, unless expressly permitted by Railway in its documentation, will void warranty coverage.

This warranty is non-transferable, and warranty coverage is limited to initial user only.

Installation and/or use of the product shall demonstrate acceptance of the terms of this warranty.

Each of the foregoing paragraphs in this article will apply to the full extent permitted by law. The invalidity, in whole or part, of any paragraph will not affect the remainder of such paragraph or any other paragraph.

RAILWAY EQUIPMENT CO.
P.O. Box 68 – Delano, Minnesota 55328 USA
Tel. (763) 972-2200 Fax (763) 972-2900
E-Mail - mail@rwy.com

(INTENTIONALLY LEFT BLANK)

PARTS LIST					
ITEM	PART NUMBER	REV	UOM	QTY	DESCRIPTION
1	9258-0021	A	EA	1	SNOW DETECTOR
2	9278-0232	B	EA	4	TRACK DUCT 20'
3	9368-0106	E	EA	1	DUCT ISOLATOR KIT, 9 X 9
4	9508-4000	A	EA	1	POINT/TRACK NOZZLE ASSY RH
5	9508-4001	A	EA	1	POINT/TRACK NOZZLE ASSY LH
6	9508-4002	A	EA	1	OUTSIDE TRACK NOZZLE ASSY LH
7	9508-4003	A	EA	1	OUTSIDE TRACK NOZZLE ASSY RH
8	9528-3404	A	EA	1	DUCT, OFFSET, 2' HD NO MIXER
9	9528-4805	A	EA	1	TIE DUCT, 136# QUICK CHANGE
10	9528-5222	A	EA	1	FLEX DUCT 2'ST INS W/MIXER
11	9638-0501	K	EA	1	ASSY, BUNGALOW W 5HP 240V GHAB

REVISION HISTORY				
REV	ECO #	DESCRIPTION	DATE	BY
A	10-0026	NEW PART	9/24/10	MF
B	10-0031	NEW FLEX DUCT	01/07/11	MF
K	11-0014	NEW MODULE/THERMOCOUPLERS	07/08/11	GJ

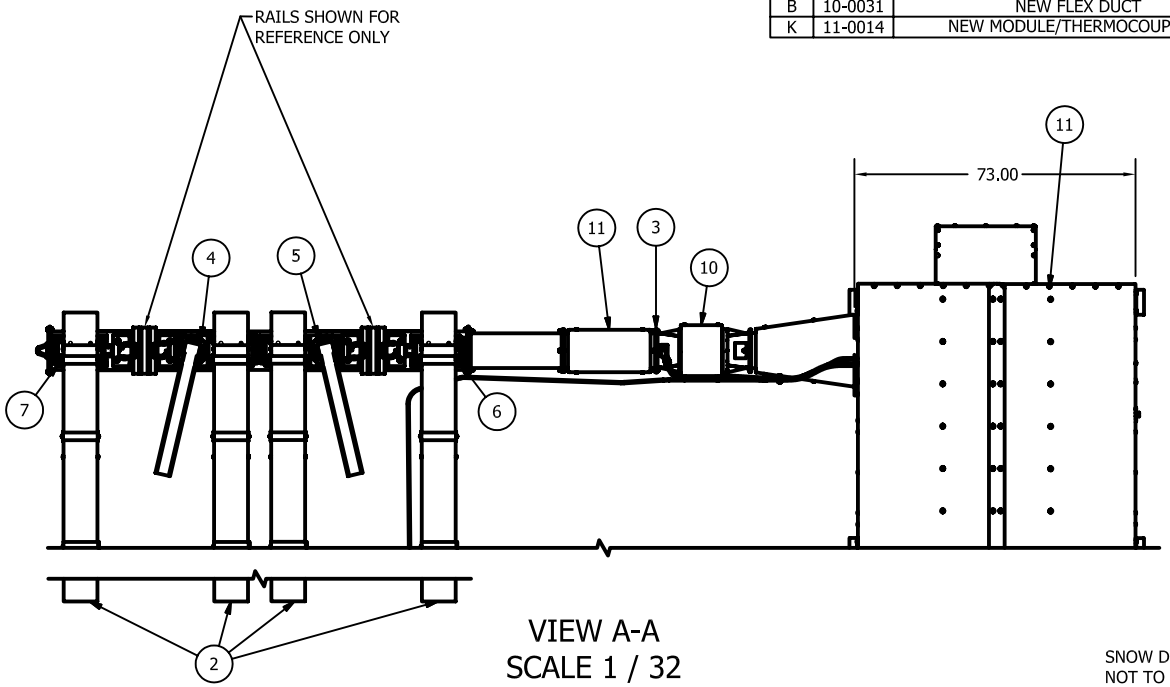

VIEW A-A
SCALE 1 / 32

SNOW DETECTOR
NOT TO SCALE

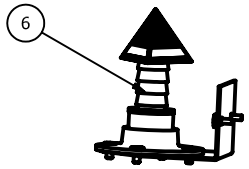

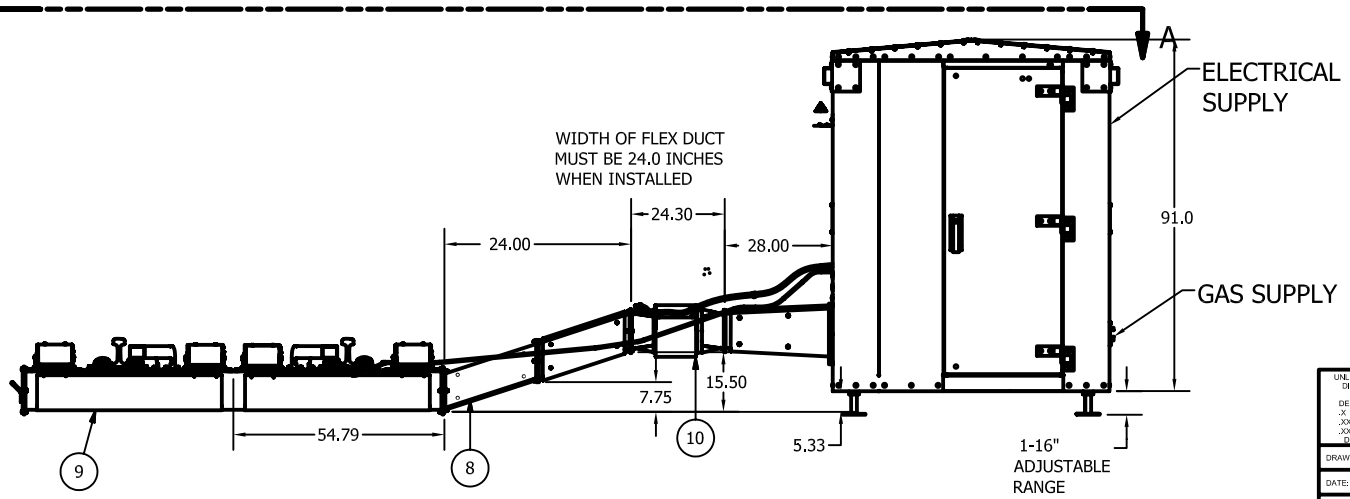

UNLESS OTHERWISE SPECIFIED:
DIMENSIONS ARE IN INCHES
TOLERANCES
DECIMALS .X ± 0.035 .XX ± 0.010 .XXX ± 0.005
ANGULAR ± 0.5
FRACTIONS ± 1/32
DO NOT SCALE DRAWING

RAILWAY EQUIPMENT CO.
MINNEAPOLIS, MINNESOTA (763) 972-2200

TITLE: BUNGALOW, GHAB, 136# TIE DUCT

(ASSEMBLY / B. O. M.)

DRAWN: EJS
DATE: 08/02/2010
MATL: N / A
BEND ALLOWANCE: N / A

DWG NO: 963N32902
REV: K
SCALE: 1 : 25
DWG SIZE: B
SHEET 1 OF 2

UNLESS OTHERWISE SPECIFIED:
DIMENSIONS ARE IN INCHES
TOLERANCES
DECIMALS ANGULAR
.X ± 0.035 ± 1°
.XX ± 0.010 FRACTIONS
.XXX ± 0.005 ± 1/32
DO NOT SCALE DRAWING

RAILWAY EQUIPMENT CO.
MINNEAPOLIS, MINNESOTA (763) 972-2200

TITLE: BUNGALOW, GHAB, 136# TIE DUCT

DRAWN: GJONAS

DATE: 07/12/11

MATL:

BEND ALLOWANCE:

DWG NO: 963N32902

REV: K

SCALE: 1:32 DWG SIZE: B SHEET 2 OF 2

SYM.	E.C.O.	BY	REVISION DESCRIPTION	DATE	APPROVED
B	00-0044	TB	ADD OUTBOARD TRACK DUCT (2)	11/22/00	---
C	00-0029	TB	NEW TIE DUCT DESIGN	05/10/01	---
D	03-0033	IW	OFFSET/MXR/OVRTMP/TIE PLT	07/01/03	---
E	04-0024	RF	UPDATE FLEX DUCT	07/15/04	---
F	05-0017	IW	NEW TRACK DUCT SPLICE	05/17/05	---

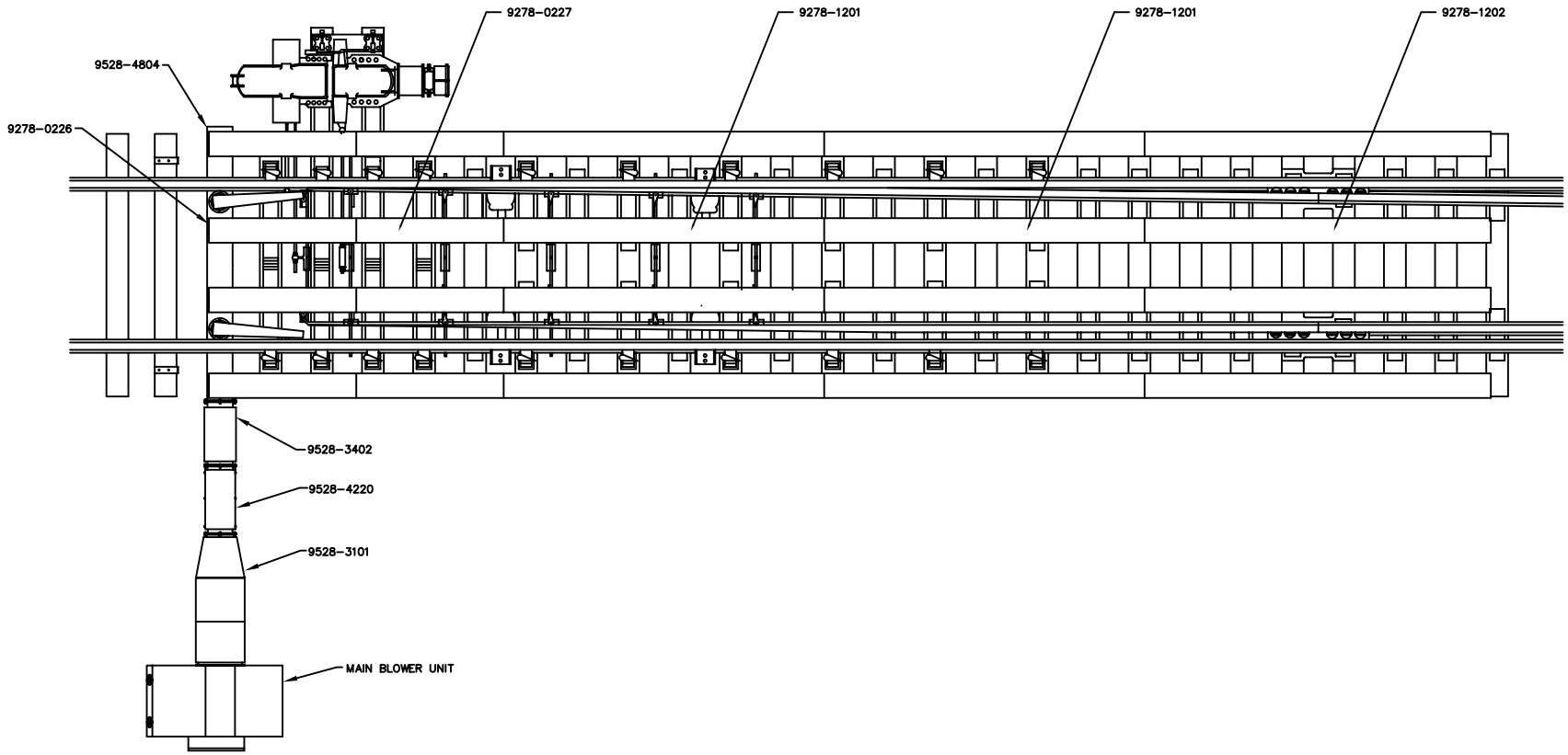

UNLESS OTHERWISE SPECIFIED: DIMENSIONS ARE IN INCHES
TOLERANCES
DECIMALS .X ± .035 .XX ± .010 .XXX ± .005
ANGULAR ± 0.5°
FRACTIONS ± 1/32
DO NOT SCALE DRAWING

DRAWN TB

DATE 11/17/00

MATERIAL N/A

BE & BEND ALLOWANCE N/A

RAILWAY EQUIPMENT CO.
DELANO, MINNESOTA (763) 972-2200

TITLE
HOT AIR BLOWER
SWITCH LAYOUT

DWG NO. 9529-0020

REV F

SCALE N/A DRAWING SIZE B SHEET 1 OF 1

Parts List					
ITEM	PART NUMBER	REV	UOM	QTY	DESCRIPTION
1	14042	A	EA	1	BAG, 4 X 6 002 ZIP TOPS
2	14165	-	EA	4	LATCH FOR SCREENS
3	2831551142	-	EA	2	BOLT, 1/4-20 X 3 HEX HEAD
4	2831851116	-	EA	11	BOLT, 3/8-16 X 1 HEX CAP
5	2831851120	-	EA	12	BOLT, 3/8-16 X 1-1/4 HEX HEAD
6	2832-5101	-	EA	2	NUT, 1/4-20 HEX
7	2832-5901	-	EA	30	NUT, 1/4-20 CENTERLOCK
8	2832-8101	-	EA	21	NUT, 3/8-16 HEX
9	2833-5129	-	EA	4	WASHER, 1/4 X 1.5 FENDER
10	2833-5211	-	EA	2	WASHER, 1/4 SPLIT LOCK
11	2833-8110	-	EA	10	WASHER, 3/8 FLAT
12	2833-8210	-	EA	21	WASHER, 3/8 SPLIT LOCK
13	29017	-	EA	10	BOLT, #8-32 X 3/8 WASHER HEAD
14	29032	-	EA	7	BOLT, 1/4-20 X 3/4 HEX SLOT
15	29051	-	EA	65	BOLT, 1/4-20 X 1/2 WITH 1/2 HD
16	45017	-	EA	1	BALL VALVE, 3/4, BRASS
17	45039	A	EA	1	REGULATOR, LOW PRESSURE
18	60114	A	EA	1	UNION, 3/8 SCH 40 BLK
19	60118	-	EA	1	REDUCER, 1 TO 3/8 SCH 40 BLK
20	60128	-	EA	1	NIPPLE, 3/8 X 2 SCH 40 BLACK
21	60154	-	EA	22	GASKET, 1/2X1 ADHESIVE
22	60185	A	FT	14	GASKET, 0.25 X 0.75 ADHESIVE BACK
23	60190	-	EA	1	HOSE, 3/8X24 SS BRAIDED
24	60236	-	EA	1	TEE, 3/8 X 1/4 X 3/8 SCH 40
25	60237	-	EA	2	FITTING, COMPRESSION 1/4X1/4
26	61011	-	EA	2	NIPPLE, 3/4 X 1.5 SCH 40 BLACK
27	61025	-	EA	2	NIPPLE, 1 X 2 IN SCH 40 BLACK
28	61035	-	EA	1	REDUCER, 1 TO 3/4 SCH 40 BLACK
29	61052	-	EA	1	FLEXHOSE 1 X 24-1.25 IN OD
30	61058	-	EA	2	ELBOW, 1IN SCH 40 BLACK
31	61065	A	IN	24	TUBING, 1/4INCH O.D. COPPER
32	93533	D	EA	1	GASKET, 11X12, HIGH TEMP
33	9508-0356	A	EA	1	ASSY, HI TEMP SENSOR SHORT
34	9508-0416	A	EA	1	RAIL TEMP SNSR T/C MAGNETIC
35	9528-3103	A	EA	1	DUCT, OFFSET, 2' LIFT-OUT
36	9528-3209	B	EA	1	ASSY, FLAME DUCT, 18X12X4'
37	9538-6115	K	EA	1	MAIN GHAB, HIGH, 5HP
38	960615	A	EA	2	TRIM, OUTLET TOP
39	960616	A	EA	3	TRIM, OUTLET SIDE
40	960617	A	EA	2	TRIM, OUTLET BOTTOM
41	960631	A	EA	1	TRIM, OUTLET SIDE
42	9608-0405	A	EA	1	ASSY, TEMPERATURE SENSOR
43	9638-1000	B	EA	1	BUNGALOW, 2/5HP GHAB, 6 X 6
44	9638-1100	A	EA	1	ASSY, ELEC BUNGALOW 230 IPH

REVISION HISTORY				
RE	ECO #	DESCRIPTION	DATE	BY
K	11-0014	NEW MODULE/THERMOCOUPLERS	7/8/2011	GJ

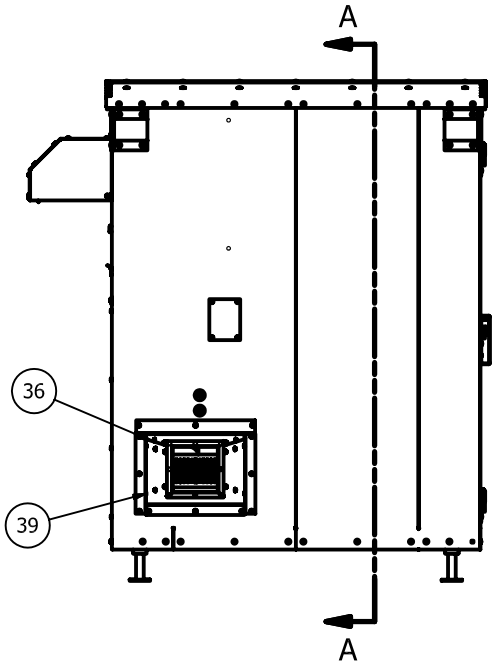

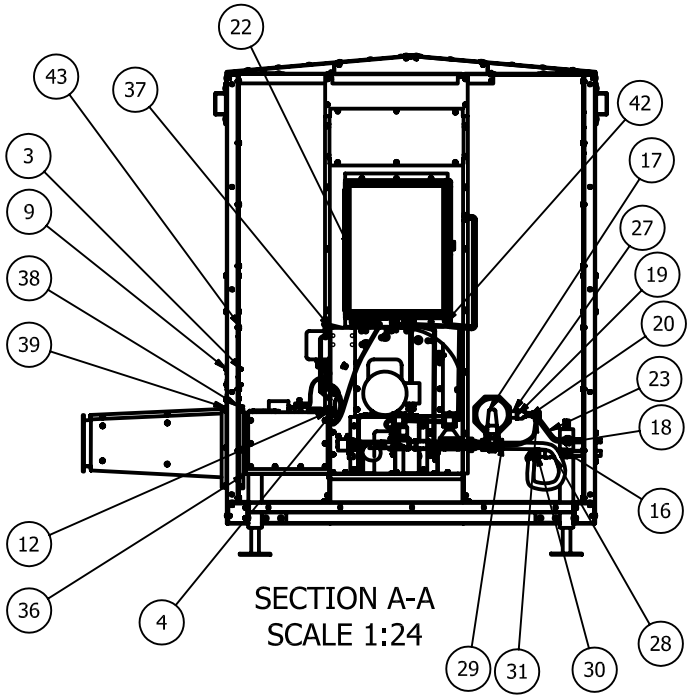

SECTION A-A
SCALE 1:24

UNLESS OTHERWISE SPECIFIED:
DIMENSIONS ARE IN INCHES
TOLERANCES
DECIMALS .X ± 0.035 .XX ± 0.010 .XXX ± 0.005
ANGULAR ±
FRACTIONS ± 1/32
DO NOT SCALE DRAWING

RAILWAY EQUIPMENT CO.
MINNEAPOLIS, MINNESOTA (763) 972-2200

TITLE: ASSY, BUNGALOW W 5HP 240V GHAB

DRAWN: GJONAS

DATE: 07/08/11

MAT'L:

BEND ALLOWANCE:

DWG NO: 9638-0501K

REV: K

SCALE:

DWG SIZE: B

SHEET 1 OF 1

Parts List					
ITEM	PART NUMBER	REV	UOM	QTY	DESCRIPTION
1	26015	A	EA	1	BLOWER WHEEL, 1350 WITH HUB
2	26016	A	EA	1	INLET CONE, 1350 90%
3	28035	"	EA	6	MOUNT, RUBBER, M/M 1/4-20
4	28107	"	EA	1	NUT, 1/4-20 THUMB, NYLON
5	2831-9003	"	EA	3	BOLT, 1/4-20 X 1 CARRIAGE
6	2831411108	"	EA	1	SCREW, #10-32 X 1/2 PAN SLT
7	2831411112	"	EA	1	SCREW, #10-32 X 3/4 PAN SLT
8	2831551110	"	EA	4	BOLT, 1/4-20 X 5/8 HEX HEAD
9	2831851116	"	EA	12	BOLT, 3/8-16 X 1 HEX CAP
10	2831861112	"	EA	23	BOLT, 3/8 X 0.75 CARRIAGE
11	2832-4101	"	EA	3	NUT, #10-32 HEX
12	2832-5101	"	EA	8	NUT, 1/4-20 HEX
13	2832-5901	"	EA	11	NUT, 1/4-20 CENTERLOCK
14	2832-8101	"	EA	14	NUT, 3/8-16 HEX
15	2832-8904	"	EA	32	NUT, 3/8-16 CENTERLOCK
16	2833-4210	"	EA	1	WASHER, #10 SPLIT LOCK
17	2833-4310	"	EA	4	WASHER, #10 EXT. STAR
18	2833-5110	"	EA	12	WASHER, 1/4 FLAT
19	2833-5211	"	EA	10	WASHER, 1/4 SPLIT LOCK
20	2833-8040	"	EA	4	RIVET, BUTTON HEAD PLATED STL
21	2833-8110	"	EA	4	WASHER, 3/8 FLAT
22	2833-8119	"	EA	8	WASHER, 3/8" X 1-1/2 FENDER
23	2833-8210	"	EA	14	WASHER, 3/8 SPLIT LOCK
24	29016	"	EA	2	BOLT, 1/4-20 X 1/2 HEX SLOT
25	29051	"	EA	70	BOLT, 1/4-20 X 1/2 WITH 1/2 HD
26	60002	"	EA	1	3/8 ROMEX
27	60169	"	EA	2	TY-RAP 0.30 X 8
28	60185	A	FT	8	GASKET, 0.25 X 0.75 ADHESIVE BACK
29	60195	"	FT	6	GASKET, .25 X 1.0 ADHESIVE BK
30	6093-0100	"	EA	5	TY-RAP, 4IN 0.10 WIDTH
31	61032	"	EA	1	NIPPLE, 1 X 3 IN SCH 40 BLACK
32	61037	"	EA	1	NIPPLE, 1 X 17 SCH 40 BLACK
33	61058	"	EA	2	ELBOW, 1IN SCH 40 BLACK
34	61070	"	EA	4	U-BOLT, MRO BOLT #05
35	8040-0952	C	EA	1	NAMEPLATE, 952/953 GHAB
36	92919	A	EA	8	WASHER, 1/4 EXT. STAR
37	9338-0026	A	EA	1	ASSY, BUZZER
38	9508-0038	A	EA	1	ASSY, GAS SENSOR EXT CABLE
39	9508-0039	A	EA	1	ASSY, DUCT SENSOR EXT CABLE
40	9508-0430	A	EA	1	ASSY, WIRED IGNITION XFMER
41	9508-0431	B	EA	1	ASSY, HARNESS AIR FLOW SWITCH
42	9508-0495	B	EA	1	ASSY, FLAME WIRE
43	95201	C	EA	1	BASE, MOTOR, 184T, GHAB
44	95202	A	EA	1	PLATE, MOTOR BASE, 184T GHAB
45	952127	C	EA	1	STUD PLATE
46	9528-0135	B	EA	1	BURNER, 12IN
47	9528-0150	B	EA	1	ASSY, GHAB PANEL, 5HP 230V 1PH
48	9538-0048	A	EA	1	ASSEMBLY, IGNITION WIRE
49	960131	A	EA	1	ENCLOSURE, HAB
50	960632	B	EA	1	BLOWER, AIR CUT FLANGE 3/5HP
51	960801	A	EA	1	BUNGALOW ENCL MOUNTING PLATE
52	96346	A	EA	1	MOTOR MOUNTING PLATE, HAB
53	9638-0028	B	EA	1	ASSY, WIRED MOTOR, 5HP/230/1PH
54	9638-0138	B	EA	1	ASSY, GHAB PIPING 5HP BUNGALOW
55	963800	B	EA	1	BLOWER OUTLET FLANGE 5HP
56	963801	B	EA	1	INTAKE BODY, 5HP BUNGALOW
57	963802	B	EA	1	PC, MOTOR BODY, HIGH 5HP
58	963803	B	EA	1	BLOWER SHROUD 3/5HP
59	963804	B	EA	1	BASE, GHAB, 5HP
60	963805	A	EA	1	DEFLECTOR, INTAKE 5HP GHAB

Parts List					
ITEM	PART NUMBER	REV	UOM	QTY	DESCRIPTION
61	963806	A	EA	1	SUPPORT, GAS 5HP BUNGALOW
62	963807	A	EA	3	SUPPORT, GAS LINE, 5 HP
63	963808	A	EA	1	CAP, INTAKE INSIDE 5HP
64	R8039-0816	A	EA	1	LABEL, FAN ROTATION
65	R8039-0830	A	EA	1	LABEL, GHAB WARNINGS
66	R8039-0955	A	EA	1	LABEL, ID PLATE AGA/CSA
67	R9500-0100	A	EA	1	MANUAL, 960 BUNGALOW 5HP
68	R9630-0105	C	EA	2	MANUAL, 960 BUNGALOW 5HP 230V

REVISION HISTORY				
REV	ECO	DESCRIPTION	DATE	BY
A	06-0015	NEW PART	8/25/2006	RMJ
B	06-0031	UPDATE GAS & CONTROLS	12/18/06	RH
C	08-0006	UPDATE TRANS/PANEL/MOD	4/8/08	WS
D	-----	BOM ENTERED/UPDATED	06/23/10	IW
E	10-0031	UPDATED ENCL/ADDED QUICK CHANGE	12/22/10	MF
K	11-0014	UPDATED MODULE	07/08/11	GJ

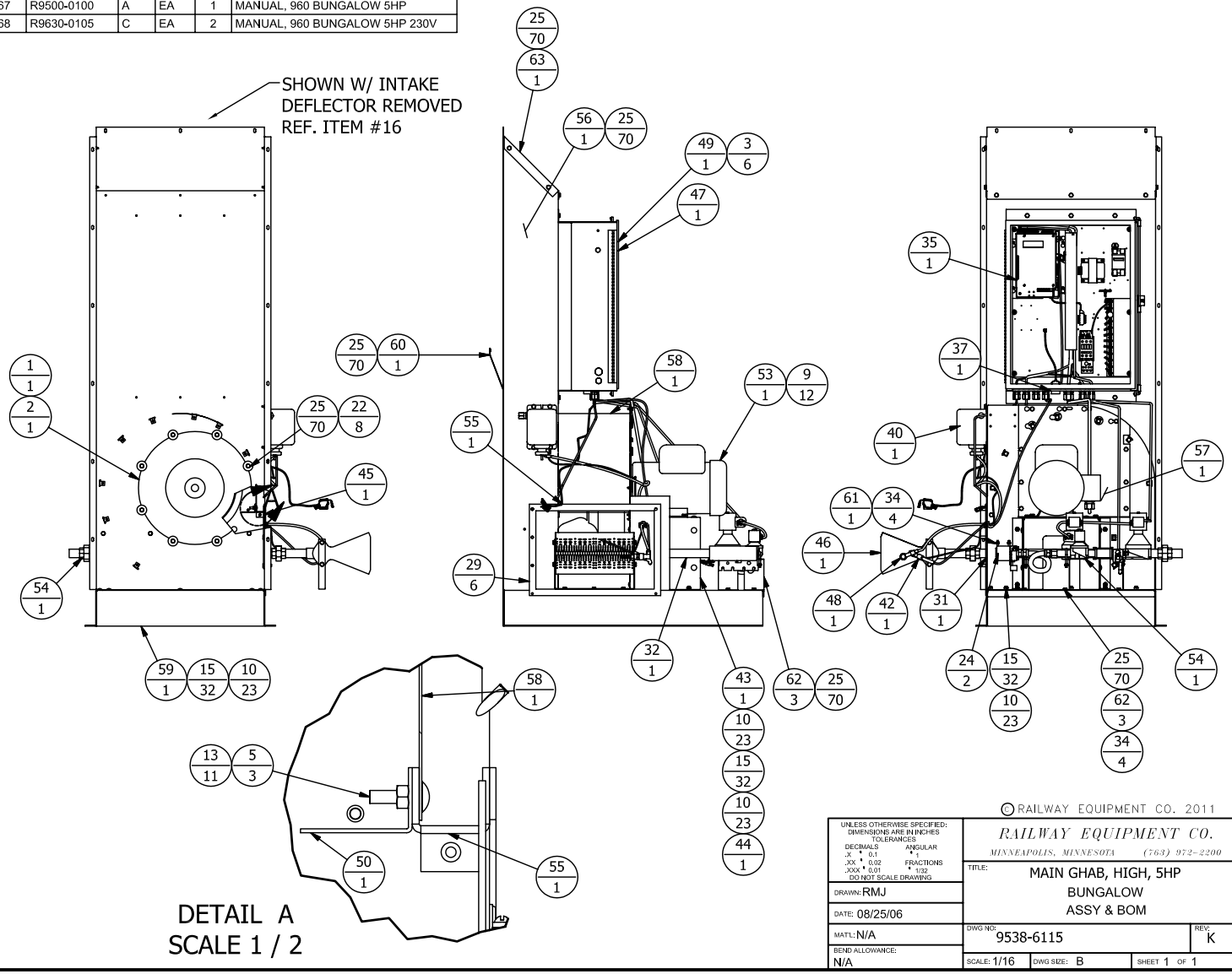

UNLESS OTHERWISE SPECIFIED: DIMENSIONS ARE IN INCHES TOLERANCES DECIMALS .X ± 0.1 .XX ± 0.02 .XXX ± 0.01 ANGULAR ± 1 FRACTIONS ± 1/32 DO NOT SCALE DRAWING

DRAWN: RMJ

DATE: 08/25/06

MAT'L: N/A

BEND ALLOWANCE: N/A

RAILWAY EQUIPMENT CO.
MINNEAPOLIS, MINNESOTA (763) 972-2200

TITLE: MAIN GHAB, HIGH, 5HP BUNGALOW ASSY & BOM

DWG NO: 9538-6115

REV: K

SCALE: 1/16 DWG SIZE: B SHEET 1 OF 1

Parts List					
ITEM	PART NUMBER	REV	UOM	QTY	DESCRIPTION
1	927237	A	EA	2	COVER PLATE, TEMP SENSOR
2	2833-9009	-	EA	8	WASHER, 3/4 SPLIT LOCK
3	2833-8210	-	EA	4	WASHER, 3/8 SPLIT LOCK
4	2831851114	-	EA	4	BOLT, 3/8-16 X 1 HEX HEAD, SS
5	28121	-	EA	8	BOLT, 3/4-10 X 1 1/2 HEX SS
6	2831851116	-	EA	16	BOLT, 3/8-16 X 1 HEX CAP
7	2832-8904	-	EA	16	NUT, 3/8-16 CENTERLOCK
8	927366	A	EA	4	E-CLIP INSULATOR
9	927248	A	EA	4	RAIL CLIP, TIE DUCT
10	952266	A	EA	1	ASSY, TIE DUCT QUICK CHANGE
11	95234	C	EA	2	GASKET, 5HP TIE DUCT
12	952267	A	EA	2	COVER PLATE WITH LIFTING LUG
13	927355	B	EA	2	TIE PLATE 136# E-CLIP-PAD TYPE

Parts List					
ITEM	PART NUMBER	REV	UOM	QTY	DESCRIPTION
14	927367	B	EA	2	E-CLIP INSULATOR PAD TIE PLATE 136#
15	14151	-	EA	1	WIRE BURLAPBAG CLOSING TIES 6"
16	R8039-0904	D	EA	2	CAUTION LABEL, TIE DUCT 136#
17	R8039-0914	D	EA	1	TAG, ACCESS PARTS FOR TIE DUCT
18	9528-4109	B	EA	1	FLANGE ADAPTER KIT, 9X9 DUCT
19	14153	-	EA	1	BAG, WOVEN YELLOW 23.5 X 48
20	12425	-	IN	720	TAPE ROLL 2" WIDE HEAVY
21	2833-9020	-	EA	16	WASHER, M12 SPLIT LOCK
22	927602	A	EA	2	COVER, POINT/TRACK NOZZLE
23	927603	A	EA	2	COVER, OUTSIDE TRACK NOZZLE
24	2831951121	-	EA	12	BOLT, 1/2-13 X 1.25 HEX SS
25	2831951123	-	EA	4	BOLT, 1/2-13 X 1.75 HEX SS

REVISION HISTORY				
REV	ECO	DESCRIPTION	DATE	BY
A	06-0024	NEW PART	10/23/2006	WS

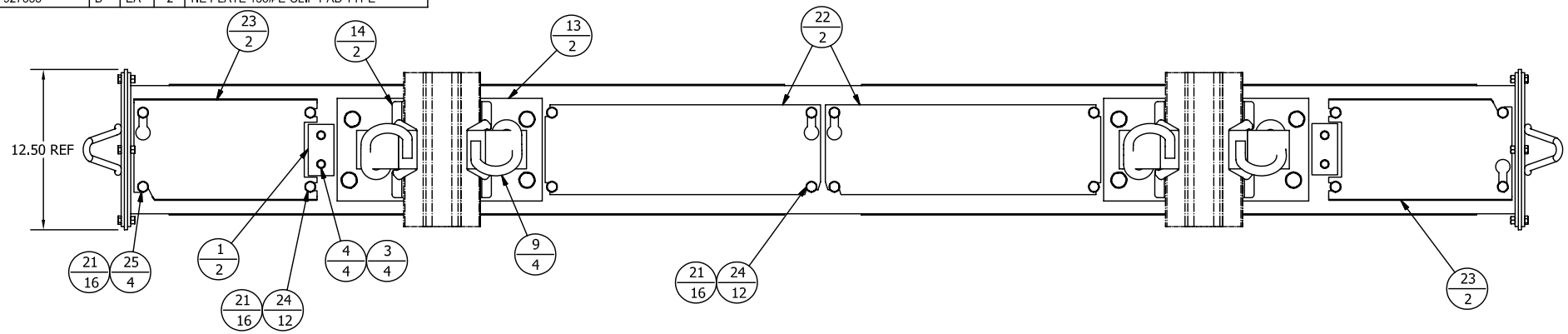

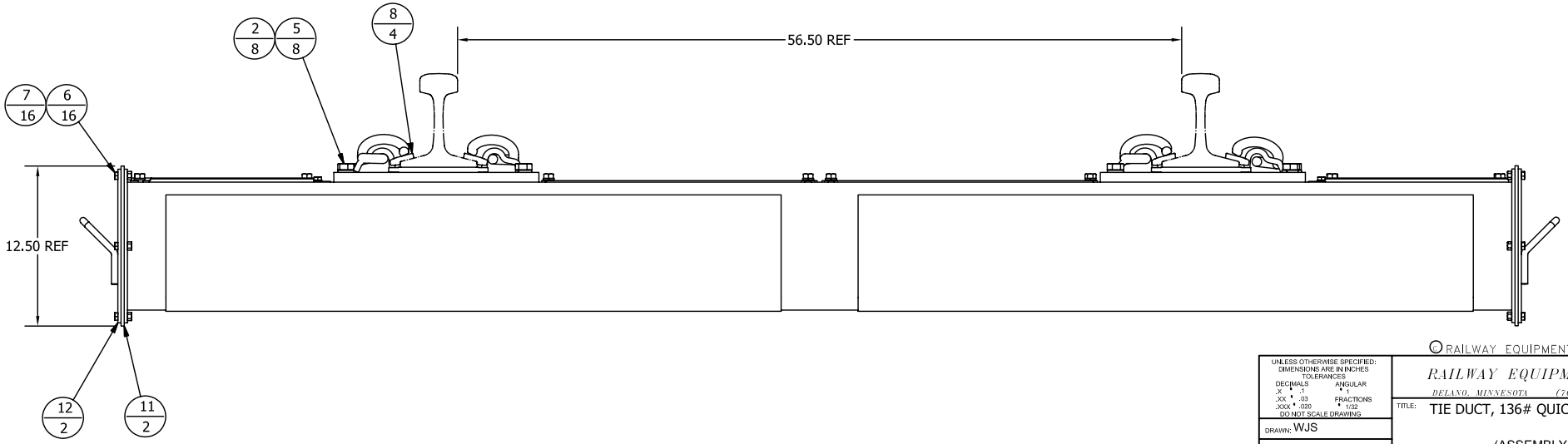

UNLESS OTHERWISE SPECIFIED:
DIMENSIONS ARE IN INCHES
TOLERANCES
DECIMALS .X ± .1 .XX ± .03 .XXX ± .020
ANGULAR ± 1°
FRACTIONS ± 1/32
DO NOT SCALE DRAWING

DRAWN: WJS

DATE: 10/23/06

MATL: SEE B.O.M.

BEND ALLOWANCE: N/A

RAILWAY EQUIPMENT CO.
DELANO, MINNESOTA (763) 972-2200

TITLE: TIE DUCT, 136# QUICK CHANGE

(ASSEMBLY)

DWG NO: 9528-4805

REV: A

SCALE: 1/8

DWG SIZE: B

SHEET 1 OF 1

Parts List					
ITEM	PART NUMBER	REV	UOM	QTY	DESCRIPTION
1	927356	B	EA	2	TIE PLATE 115# E-CLIP PAD TYPE
2	927237	A	EA	2	COVER PLATE, TEMP SENSOR
3	2831951121	-	EA	12	BOLT, 1/2-13 X 1.25 HEX SS
4	2833-9009	-	EA	8	WASHER, 3/4 SPLIT LOCK
5	2833-8210	-	EA	4	WASHER, 3/8 SPLIT LOCK
6	2831851114	-	EA	4	BOLT, 3/8-16 X 1 HEX HEAD, SS
7	28121	-	EA	8	BOLT, 3/4-10 X 1 1/2 HEX SS
8	2831851116	-	EA	16	BOLT, 3/8-16 X 1 HEX CAP
9	2832-8904	-	EA	16	NUT, 3/8-16 CENTERLOCK
10	927368	A	EA	2	PAD FOR E-CLIP RUBBER 115# TIE
11	927366	A	EA	4	E-CLIP INSULATOR
12	927248	A	EA	4	RAIL CLIP, TIE DUCT
13	952266	A	EA	1	ASSY, TIE DUCT QUICK CHANGE

Parts List					
ITEM	PART NUMBER	REV	UOM	QTY	DESCRIPTION
14	95234	C	EA	2	GASKET, 5HP TIE DUCT
15	952267	A	EA	2	COVER PLATE WITH LIFTING LUG
16	14151	-	EA	1	WIRE BURLAPBAG CLOSING TIES 6"
17	R8039-0905	D	EA	2	CAUTION LABEL, TIE DUCT 115#
18	R8039-0915	D	EA	1	TAG, ACCESS PARTS FOR TIE DUCT
19	9528-4109	B	EA	1	FLANGE ADAPTOR KIT, 9X9 DUCT
20	14153	-	EA	1	BAG, WOVEN YELLOW 23.5 X 48
21	12425	-	IN	720	TAPE ROLL 2" WIDE HEAVY
22	2833-9020	-	EA	16	WASHER, M12 SPLIT LOCK
23	927602	A	EA	2	COVER, POINT/TRACK NOZZLE
24	927603	A	EA	2	COVER, OUTSIDE TRACK NOZZLE
25	2831951123	-	EA	4	BOLT, 1/2-13 X 1.75 SS HEX

REVISION HISTORY				
REV	ECO	DESCRIPTION	DATE	BY
A	06-0024	NEW PART	10/23/2006	WS

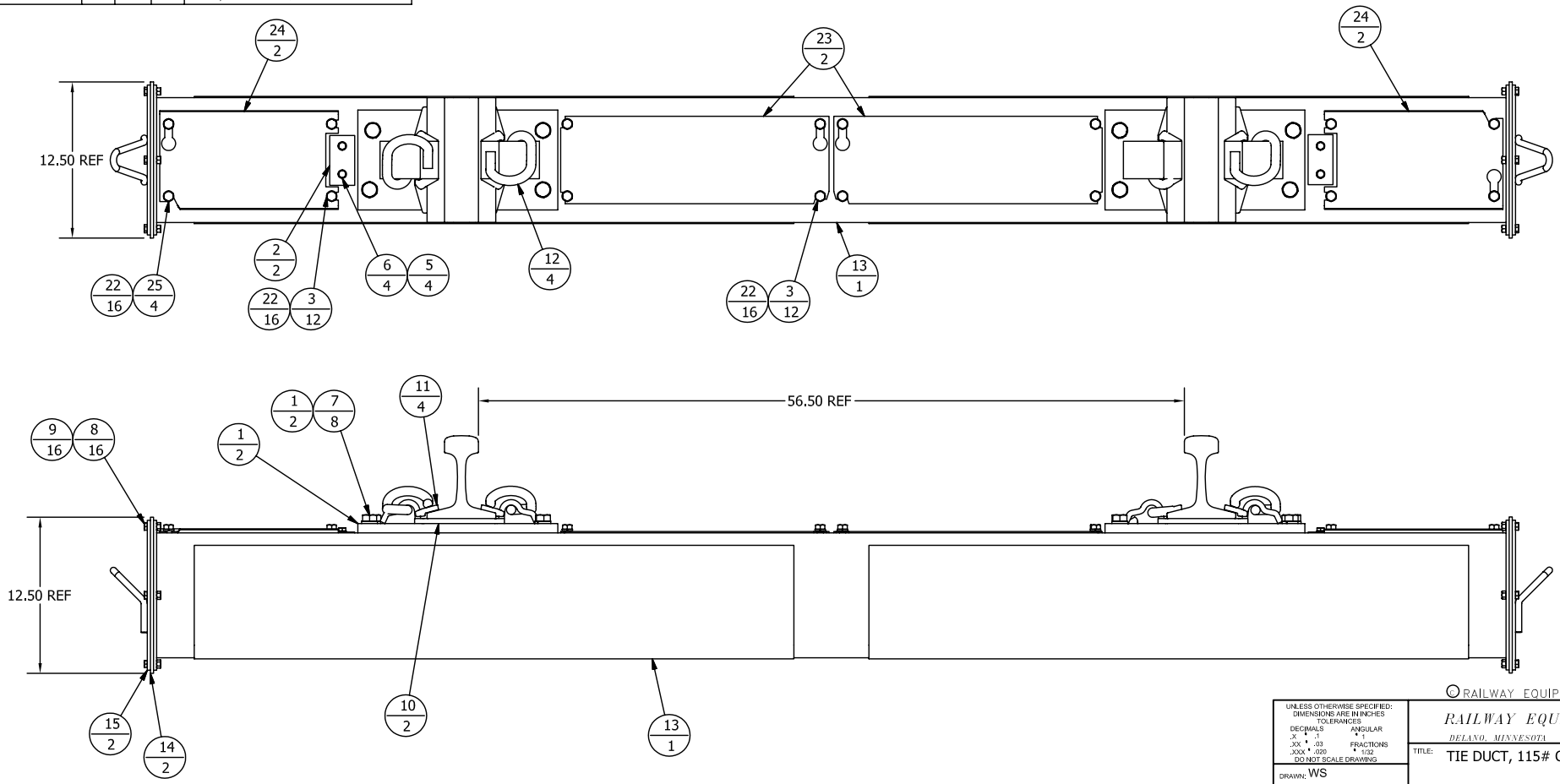

UNLESS OTHERWISE SPECIFIED: DIMENSIONS ARE IN INCHES
TOLERANCES
DECIMALS .X ± .1 .XX ± .03 .XXX ± .020
ANGULAR ± 1°
FRACTIONS ± 1/32
DO NOT SCALE DRAWING

RAILWAY EQUIPMENT CO.
DELANO, MINNESOTA (763) 972-2200

TITLE: TIE DUCT, 115# QUICK CHANGE (ASSEMBLY)

DRAWN: WS
DATE: 10/23/06
MATL: SEE B.O.M.
BEND ALLOWANCE: N/A
DWG NO: 9528-4605
REV: A
SCALE: 1/8
DWG SIZE: B
SHEET 1 OF 1

Parts List					
ITEM	PART NUMBER	REV	UOM	QTY	DESCRIPTION
1	927600	B	EA	1	POINT/TD NOZZLE MOUNT PLATE RH
2	927701	A	EA	1	SCREEN, POINT NOZZLE
3	927702	A	EA	1	SCREEN TRACK DUCT NOZZLE LARGE
4	92757	D	EA	1	GASKET, ISO, PT NOZZLE RED
5	92759	B	EA	1	GASKET, ISO, TR NOZZLE RED
6	93617	D	EA	1	POINT NOZZLE, 4 X 4 GALV
7	2833-9015	B	EA	8	WASHER, ISOLATING NOZZLE
8	28106	"	EA	8	SPACER, .38X.625X.375 ROUND
9	2833-9014	"	EA	4	WASHER, 5/8 FLAT SAE
10	2833-8110	"	EA	8	WASHER, 3/8 FLAT
11	2833-8210	"	EA	8	WASHER, 3/8 SPLIT LOCK
12	2832-8101	"	EA	8	NUT, 3/8-16 HEX
14	R9508-4000	A	EA	1	LABEL, QUICK NOZZLE ASSY RH
15	927490	A	EA	1	NOZZLE, TRACK DUCT ASSY

REVISION HISTORY				
REV	ECO	DESCRIPTION	DATE	BY
A	06-0024	NEW PART	10/24/2006	WS

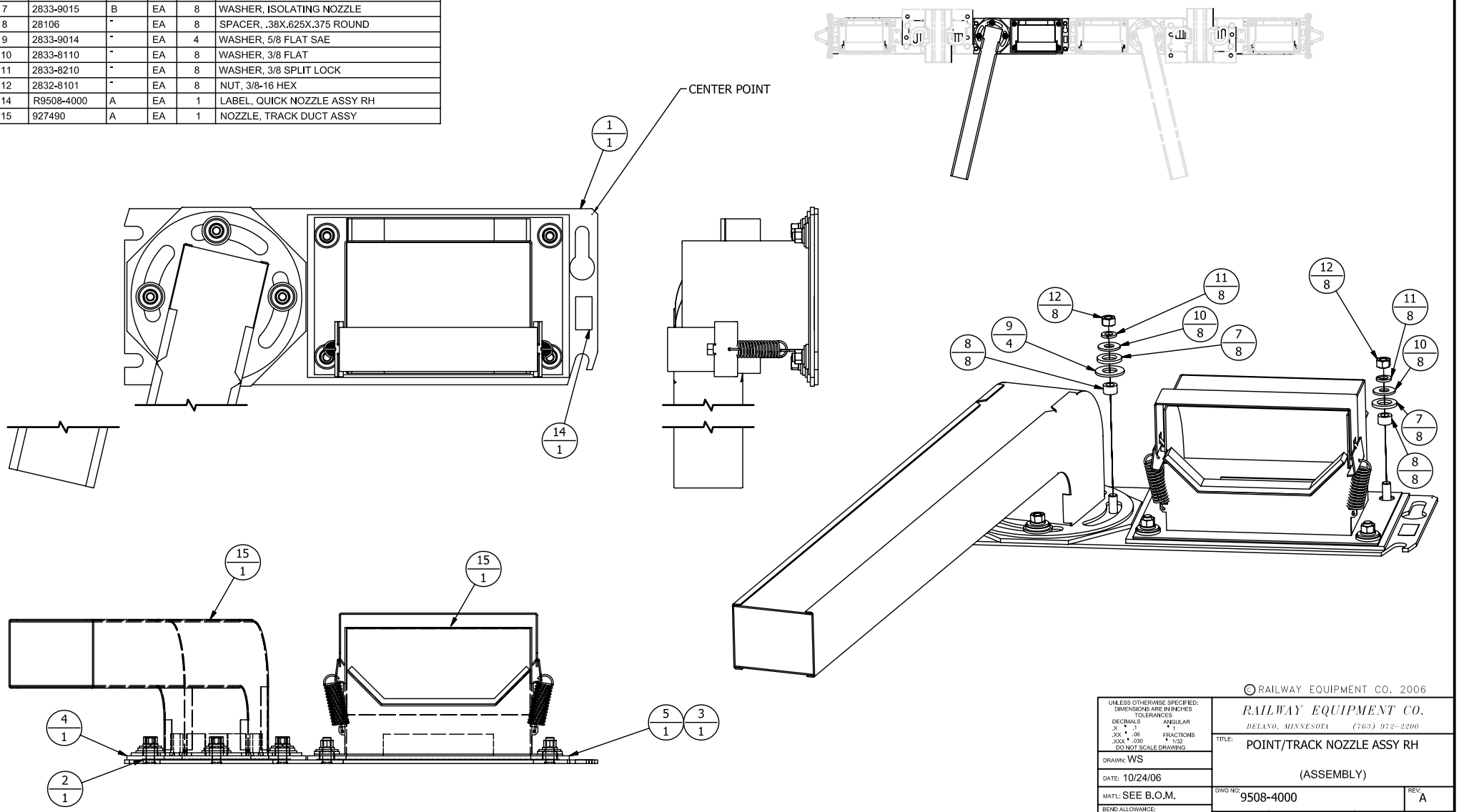

UNLESS OTHERWISE SPECIFIED:
DIMENSIONS ARE IN INCHES
TOLERANCES
DECIMALS .X ± .1 .XX ± .08 .XXX ± .030
ANGULAR ± 1°
FRACTIONS ± 1/32
DO NOT SCALE DRAWING

RAILWAY EQUIPMENT CO.
DELANO, MINNESOTA (763) 972-2200

TITLE: POINT/TRACK NOZZLE ASSY RH

(ASSEMBLY)

DRAWN: WS
DATE: 10/24/06
MAT'L: SEE B.O.M.
BEND ALLOWANCE: N/A
DWG NO: 9508-4000
REV: A
SCALE: 1/4
DWG SIZE: B
SHEET 1 OF 1

Parts List					
ITEM	PART NUMBER	REV	UOM	QTY	DESCRIPTION
1	927606	B	EA	1	POINT/TD NOZZLE MOUNT PLATE LH
2	927701	A	EA	1	SCREEN, POINT NOZZLE
3	927702	A	EA	1	SCREEN TRACK DUCT NOZZLE LARGE
4	92757	D	EA	1	GASKET, ISO, PT NOZZLE RED
5	92759	B	EA	1	GASKET, ISO, TR NOZZLE RED
6	93617	D	EA	1	POINT NOZZLE, 4 X 4 GALV
7	2833-9015	B	EA	8	WASHER, ISOLATING NOZZLE
8	28106	"	EA	8	SPACER, .38X.625X.375 ROUND
9	2833-9014	"	EA	4	WASHER, 5/8 FLAT SAE
10	2833-8110	"	EA	8	WASHER, 3/8 FLAT
11	2833-8210	"	EA	8	WASHER, 3/8 SPLIT LOCK
12	2832-8101	"	EA	8	NUT, 3/8-16 HEX NUT
13	60195	"	FT	1.667	GASKET, .25 X 1.0 ADHESIVE BK
14	R9508-4001	A	EA	1	LABEL, QUICK NOZZLE ASSY LH
15	927490	A	EA	1	NOZZLE, TRACK DUCT ASSY

REVISION HISTORY				
REV	ECO	DESCRIPTION	DATE	BY
A	06-0024	NEW PART	10/19/2006	WS

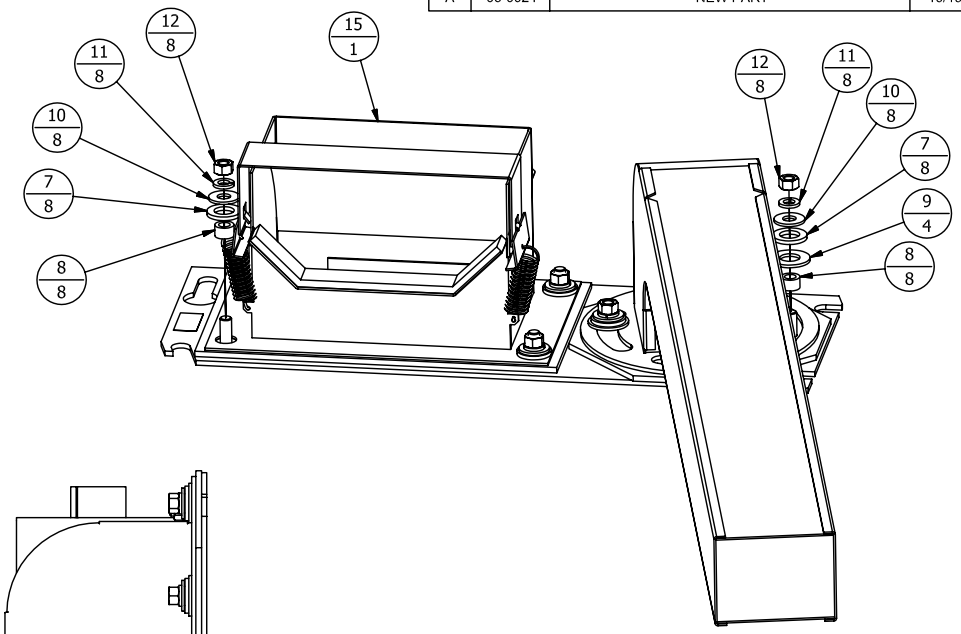

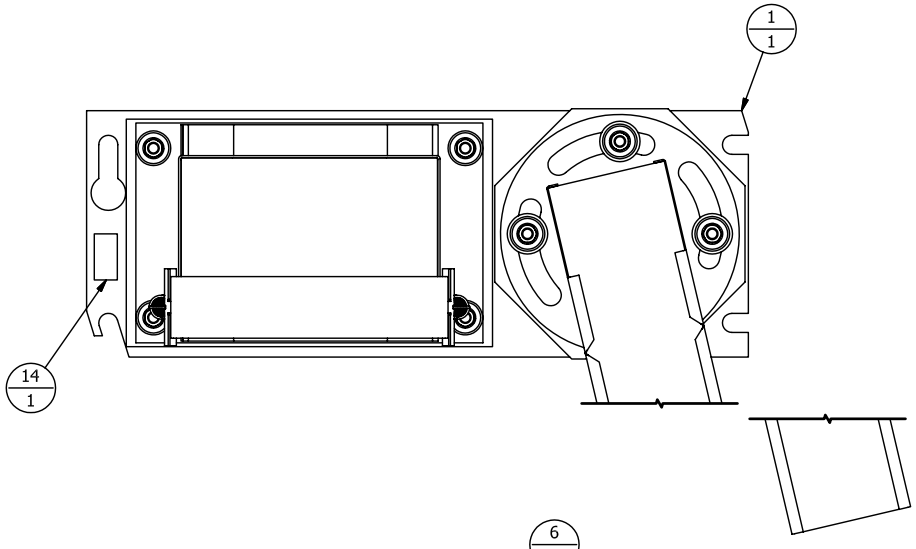

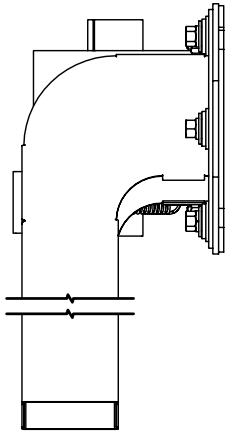

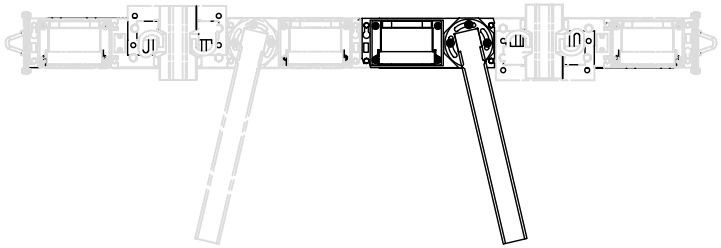

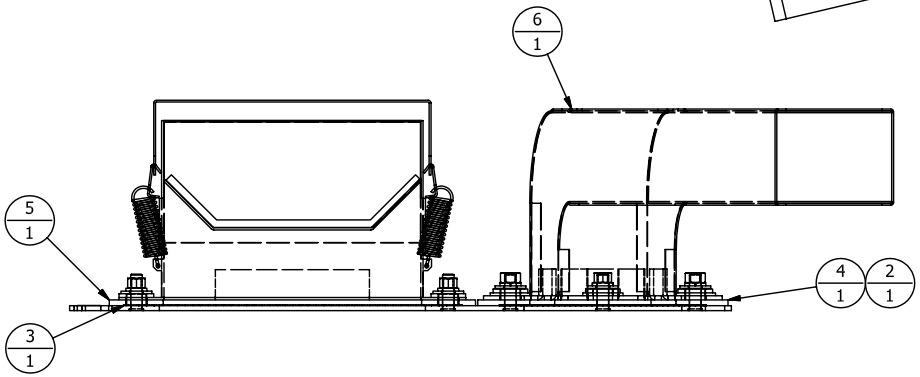

UNLESS OTHERWISE SPECIFIED:
DIMENSIONS ARE IN INCHES
TOLERANCES
DECIMALS .X ± .1 .XX ± .06 .XXX ± .030
ANGULAR ± 1°
FRACTIONS ± 1/32
DO NOT SCALE DRAWING

DRAWN: WS

DATE: 10/19/06

MAT'L: SEE B.O.M.

BEND ALLOWANCE: N/A

RAILWAY EQUIPMENT CO.
DELANO, MINNESOTA (763) 972-2200

TITLE: POINT/TRACK NOZZLE ASSY LH

(ASSEMBLY)

DWG NO: 9508-4001

REV: A

SCALE: 1/4

DWG SIZE: B

SHEET 1 OF 1

Parts List					
ITEM	PART NUMBER	REV	UOM	QTY	DESCRIPTION
1	92759	B	EA	1	GASKET, ISO, TR NOZZLE RED
2	927702	A	EA	1	SCREEN TRACK DUCT NOZZLE LARGE
3	28106		EA	1	SPACER, .38X.625X.375 ROUND
4	2833-9015	B	EA	4	WASHER, ISOLATING NOZZLE
5	2833-8110	"	EA	4	WASHER, 3/8 FLAT
6	2833-8210	"	EA	4	WASHER, 3/8 SPLIT LOCK
7	2832-8101	"	EA	4	NUT, 3/8-16 HEX
8	927604	B	EA	1	TRACK DUCT NOZZLE MOUNT PLATE
9	60195	"	FT	1.667	GASKET, .25 X 1.0 ADHESIVE BK
10	R9508-4002	A	EA	1	LABEL, QUICK NOZZLE ASSY LH
11	927490	A	EA	1	NOZZLE, TRACK DUCT ASSY

REVISION HISTORY				
REV	ECO	DESCRIPTION	DATE	BY
A	06-0024	NEW PART	10/24/2006	WS

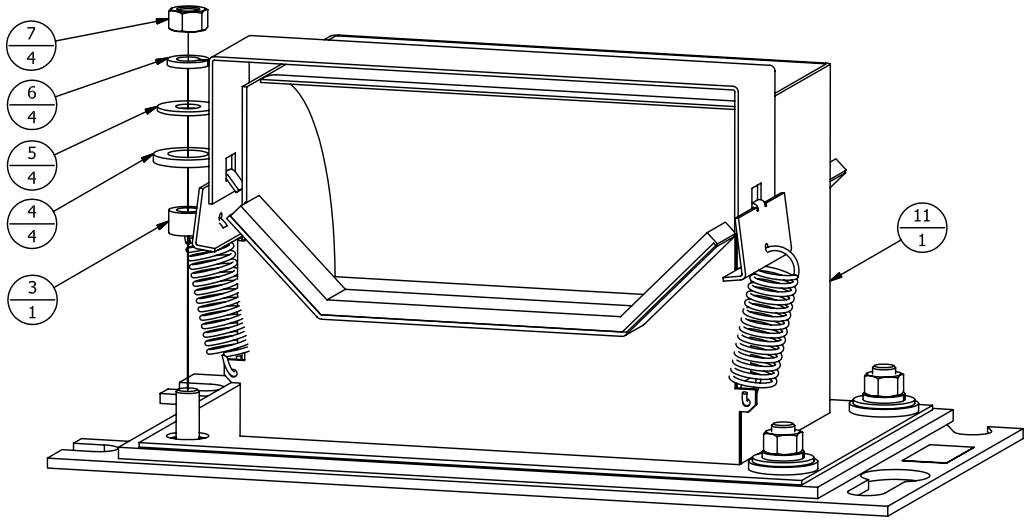

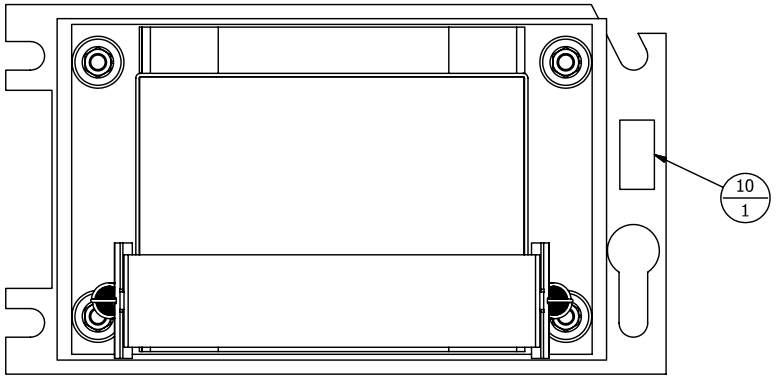

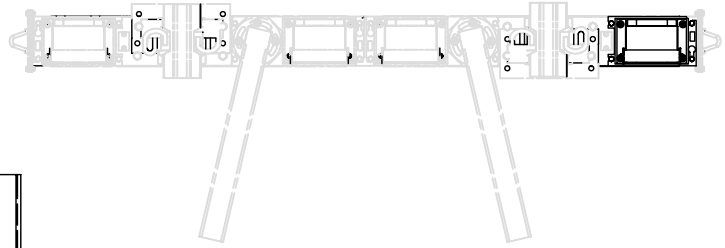

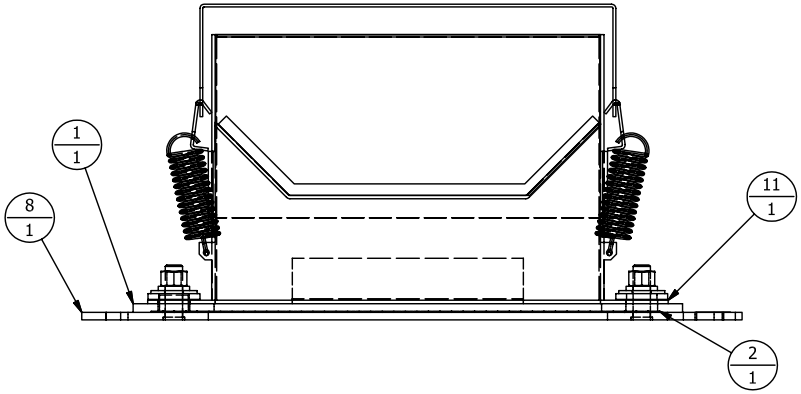

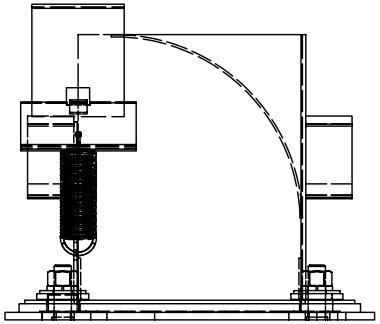

UNLESS OTHERWISE SPECIFIED:
DIMENSIONS ARE IN INCHES
TOLERANCES
DECIMALS .X ± .1 .XX ± .08 .XXX ± .030
ANGULAR ± 1°
FRACTIONS ± 1/32
DO NOT SCALE DRAWING

DRAWN: WS

DATE: 10/24/06

MAT'L: SEE B.O.M.

BEND ALLOWANCE: N/A

RAILWAY EQUIPMENT CO.
DELANO, MINNESOTA (763) 972-2200

TITLE: OUTSIDE TRACK NOZZLE ASSY LH

(ASSEMBLY)

DWG NO: 9508-4002

REV: A

SCALE: 3/8 DWG SIZE: B SHEET 1 OF 1

Parts List					
ITEM	PART NUMBER	REV	UOM	QTY	DESCRIPTION
1	92759	B	EA	1	GASKET, ISO, TR NOZZLE RED
2	927702	A	EA	1	SCREEN TRACK DUCT NOZZLE LARGE
3	28106	-	EA	1	SPACER, .38X.625X.375 ROUND
4	2833-9015	B	EA	4	WASHER, ISOLATING NOZZLE
5	2833-8110	-	EA	4	WASHER, 3/8 FLAT
6	2833-8210	-	EA	4	WASHER, 3/8 SPLIT LOCK
7	2832-8101	-	EA	4	NUT, 3/8-16 HEX
8	927604	B	EA	1	TRACK DUCT NOZZLE MOUNT PLATE
9	60195	-	FT	1.67	GASKET, .25 X 1.0 ADHESIVE BK
10	R9508-4003	A	EA	1	LABEL, QUICK NOZZLE ASSY RH
11	927490	A	EA	1	NOZZLE, TRACK DUCT ASSY

REVISION HISTORY				
REV	ECO	DESCRIPTION	DATE	BY
A	06-0024	NEW PART	10/19/2006	WS

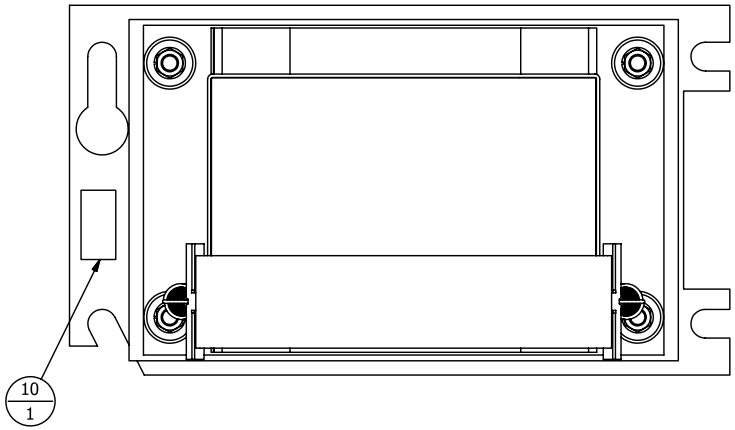

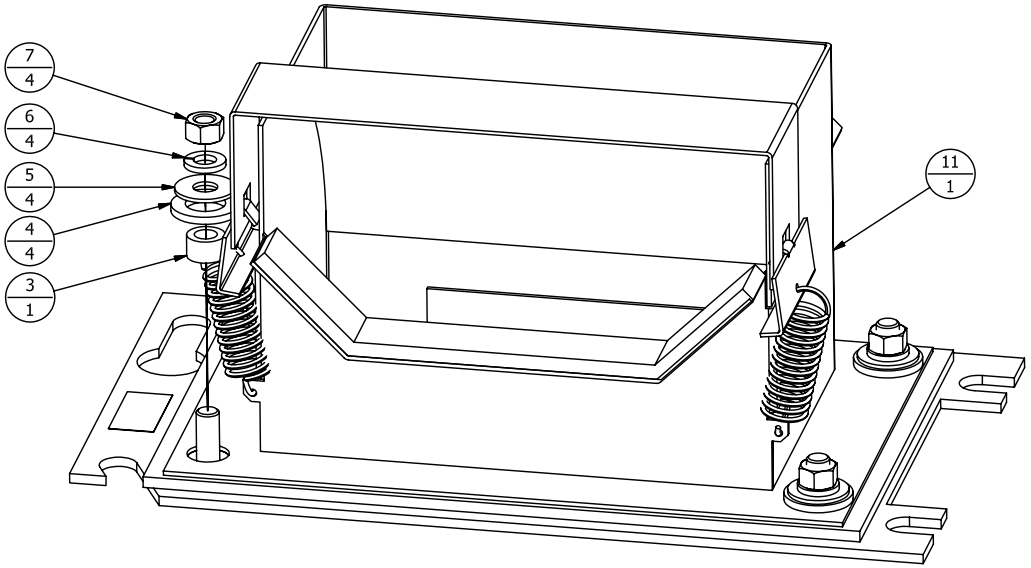

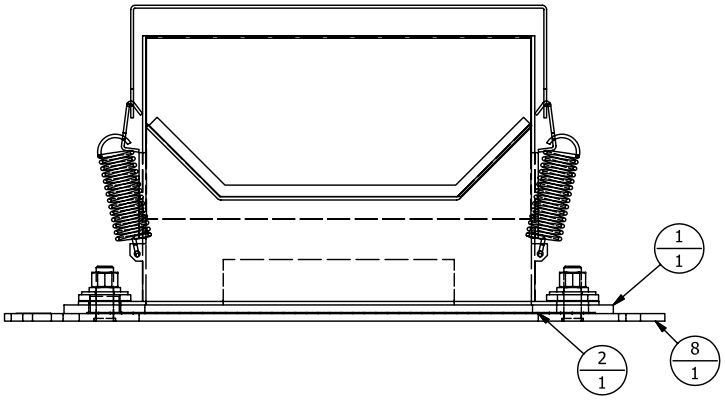

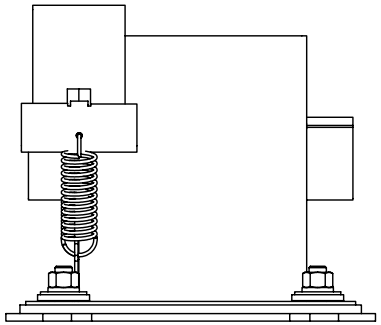

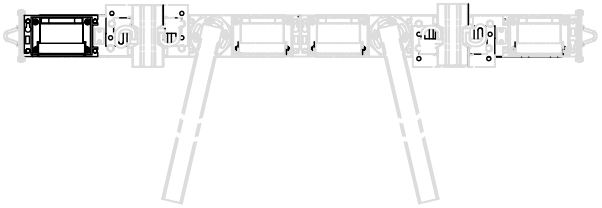

UNLESS OTHERWISE SPECIFIED:
DIMENSIONS ARE IN INCHES
TOLERANCES
DECIMALS ANGULAR
.X ± .1 ± 1°
.XX ± .08 FRACTIONS
.XXX ± .03 ± 1/32
DO NOT SCALE DRAWING

RAILWAY EQUIPMENT CO.
DELANO, MINNESOTA (763) 972-2200

TITLE: OUTSIDE TRACK NOZZLE ASSY RH

(ASSEMBLY)

DRAWN: WS

DATE: 10/19/06

MAT'L: SEE B.O.M.

BEND ALLOWANCE: N/A

DWG NO: 9508-4003

REV: A

SCALE: 3/8

DWG SIZE: B

SHEET 1 OF 1

Parts List					
ITEM	PART NUMBER			QTY	DESCRIPTION
1	927488	A	EA	1	NOZZLE, TRACK DUCT, NO DAMPER
2	92745	A	EA	1	HOLDDOWN STRAP, T. DUCT
5	92742	-	EA	2	SPRING, TRACK DUCT SUPPORT
4	92743	B	EA	2	CLIP, HOLDDOWN SPRING
7	60195	-	FT	1.67	GASKET, .25 X 1.0 ADHESIVE BK

REVISION HISTORY				
REV	ECO	DESCRIPTION	DATE	BY
A	06-0028	NEW PART	11/30/2006	RMJ

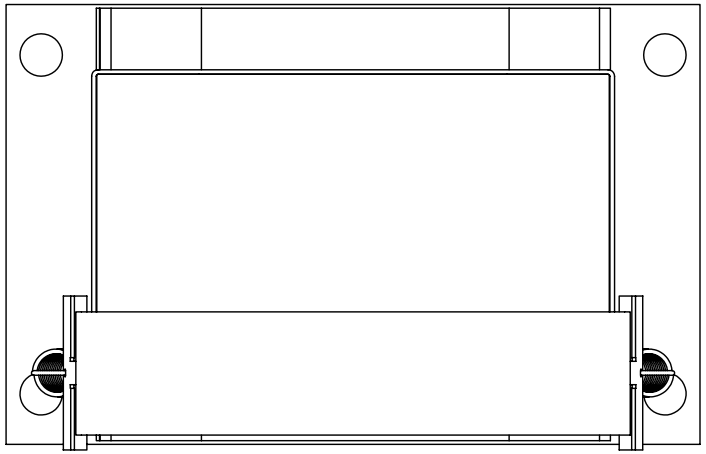

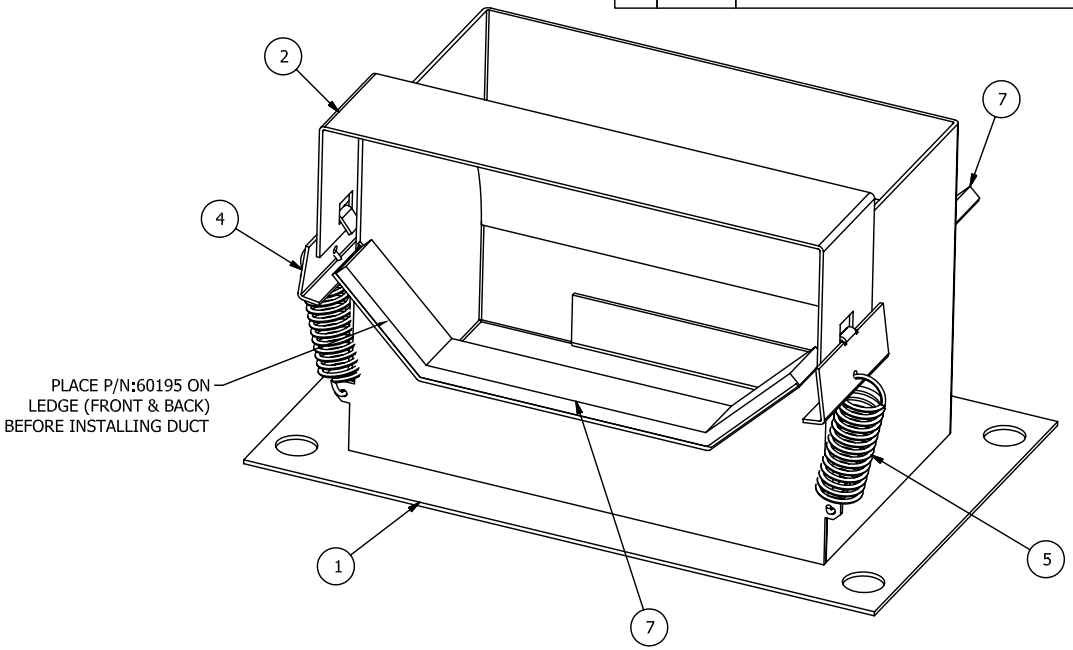

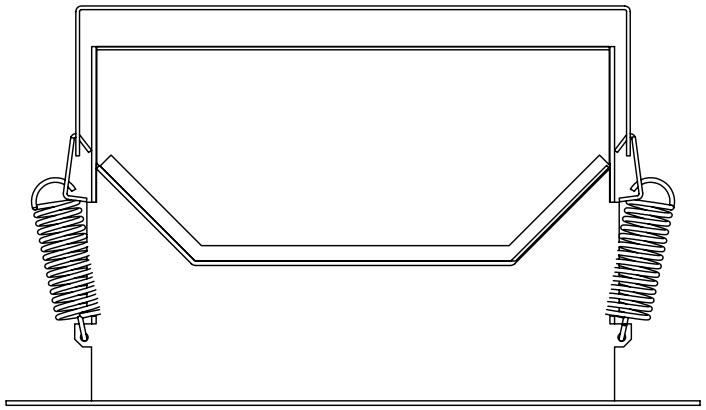

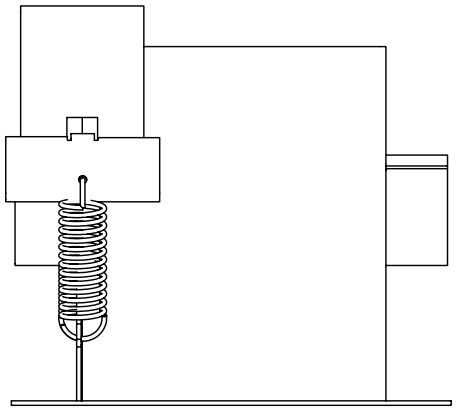

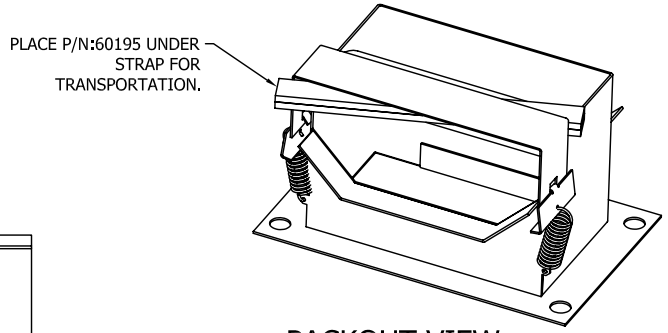

PACKOUT VIEW
SCALE 1 / 4

UNLESS OTHERWISE SPECIFIED:
DIMENSIONS ARE IN INCHES
TOLERANCES
DECIMALS .X ± 0.1, .XX ± 0.02, .XXX ± 0.01
ANGULAR ± 1°
FRACTIONS ± 1/32
DO NOT SCALE DRAWING

RAILWAY EQUIPMENT CO.
DELANO, MINNESOTA (763) 972-2200

TITLE: NOZZLE, TRACK DUCT ASSY

DRAWN: RMJ
DATE: 11/30/06
MATL: N/A
BEND ALLOWANCE: N/A
DWG NO: 927490
REV: A
SCALE: 1/2
DWG SIZE: B
SHEET 1 OF 1

ITEM NO.	PART NO.	UOM	QTY	DESCRIPTION
1	2831851114	EA	4	BOLT, HEX HD 3/8-16 x 1" SS
2	2833-8110	EA	4	WASHER, PLAIN 3/8"
3	2833-9015B	EA	4	WASHER, INSULATOR
4	28106	EA	4	SPACER, ROUND, .38 X .625 X .375
5	92757D	EA	1	GASKET, POINT NOZZLE
6	2833-9014	EA	4	WASHER, 5/8 FLAT PLATED
7	14046	EA	1	BAG, ZIPTOP 9x12 4ml
8	2833-8210	EA	4	WASHER, SPLIT LOCK 3/8"
9	927701A	EA	1	SCREEN, POINT NOZZLE

SYM.	E.C.O.	BY	REVISION DESCRIPTION	DATE	APPROVED
B	---	TB	ADD 927701	10/19/00	---
C	06-0028	RJ	CORNERS CUT OFF ON DUCT	11/29/06	---

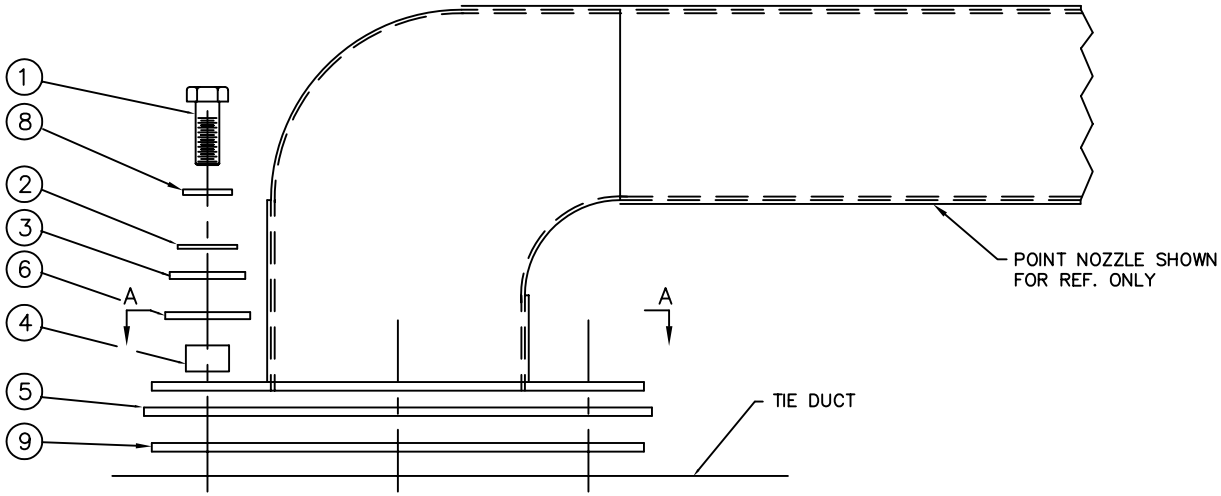

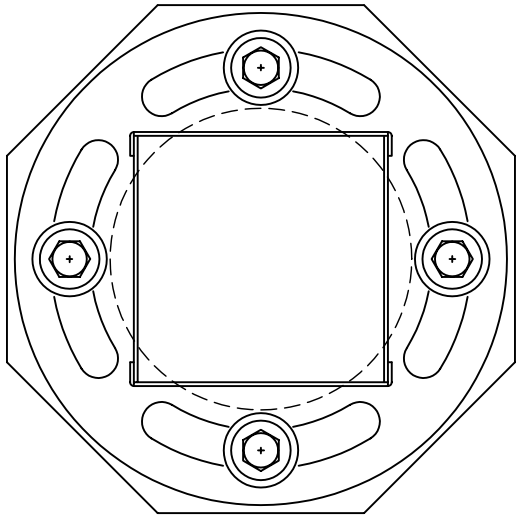

SECTION A-A

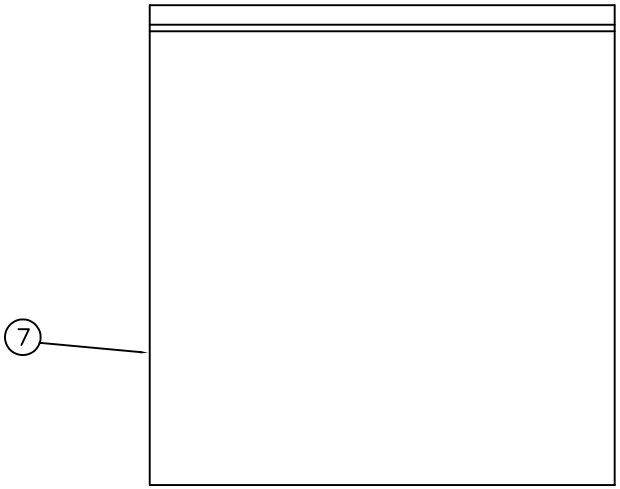

UNLESS OTHERWISE SPECIFIED: DIMENSIONS ARE IN INCHES
TOLERANCES
DECIMALS .X ± .035 .XX ± .010 .XXX ± .005
ANGULAR ± 0.5°
FRACTIONS ± 1/32
DO NOT SCALE DRAWING

DRAWN EFK

DATE 04/11/97

MATERIAL N/A

BEND ALLOWANCE N/A

RAILWAY EQUIPMENT CO.
DELANO, MINNESOTA (763) 972-2200

TITLE
ISOLATION KIT ASSEMBLY
POINT NOZZLE
TIE DUCT

DWG NO. 9278-0021

REV C

SCALE 1/4 DRAWING SIZE B SHEET 1 OF 1

ITEM NO.	PART NO.	UOM	QTY	DESCRIPTION
1	2831851114	EA	4	BOLT, HEX 3/8-16 x 1" SS
2	2833-8110	EA	4	WASHER, PLAIN 3/8"
3	2833-9015	EA	4	WASHER, INSULATOR
4	28106	EA	4	SPACER, ROUND, .38 X .625 X .375
5	92759	EA	1	GASKET, TRACK DUCT NOZZLE
6	60195	FT	1.67	GASKET, ADHESIVE .25 x 1"
7	14045	EA	1	BAG, ZIPTOP 12 x 15 4ml
8	2833-8210	EA	4	WASHER, SPLIT LOCK 3/8"
9	927702	EA	1	SCREEN, TRACK DUCT NOZZLE

SYM.	E.C.O.	BY	REVISION DESCRIPTION	DATE	APPROVED
A	00-0005	TB	NEW PART	12.29.00	

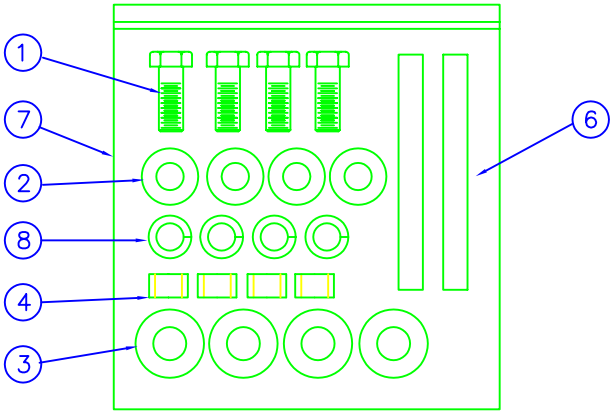

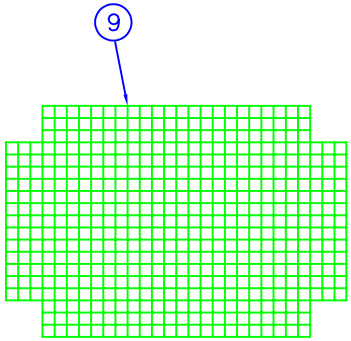

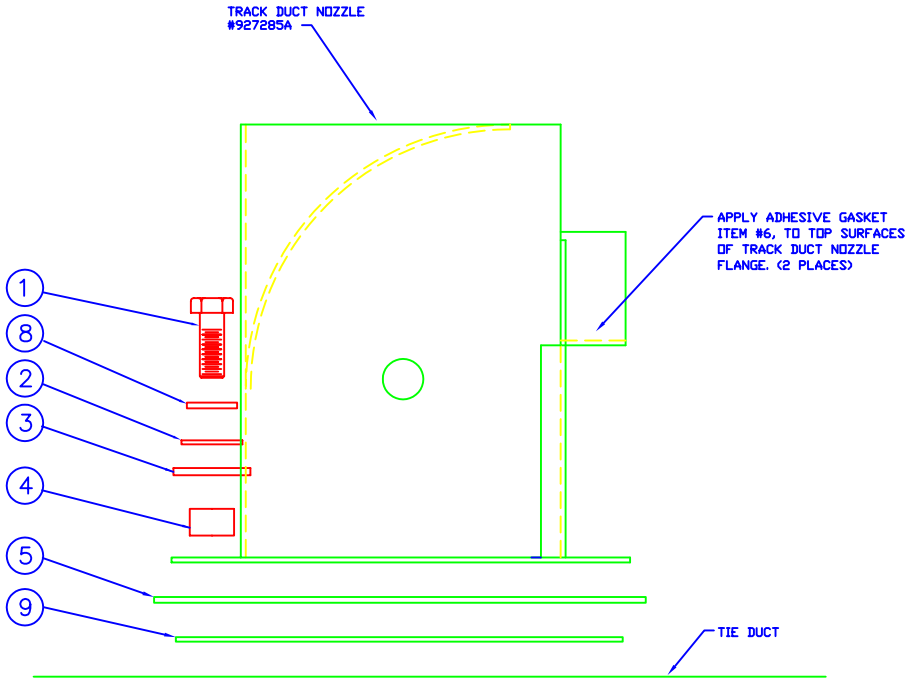

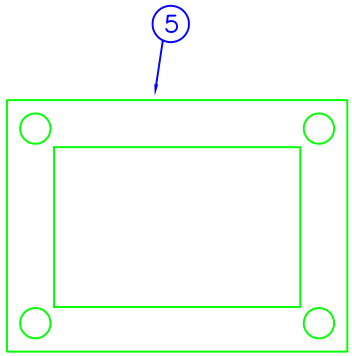

FORMED HOLES
"O" INDICATES FORMED INTO DRAWING
"U" INDICATES FORMED UP FROM DRAWING

REF.SCHEMATIC NO.

REF.CONNECTION DIA.

CAD NO. | MADE FROM

UNLESS OTHERWISE SPECIFIED
ALL BENDS ARE 90°
ALL BENDS HAVE MIN. RADIUS
DIMENSIONS ARE IN INCHES
TOLERANCE ON
FRACTIONS ± 1/32
DECIMALS .xx ±.03 .xxx ±.010 .xxxx ±.005
ANGLES ±1.00°

MATERIAL

FINISH

DRAWN BY T. BUHL | DATE 12.19.00
CHECKED BY | DATE
APPROVED BY | DATE
SHEET 1 OF 1

RAILWAY EQUIPMENT CO.
DELANO, MINNESOTA (763) 972-2200

TITLE
ASS'Y, ISO KIT
TRACK NOZZLE
TIE DUCT

DWG NO. 9278-0027 | REV. A

Parts List					
ITEM	PART NUMBER	REV	UOM	QTY	DESCRIPTION
1	14045	-	EA	1	BAG, 12 X 15 4MIL ZIPTOP
2	2831311104	-	EA	2	SCREW, #8-32 X 1/4 PAN SLT
3	2831411108	-	EA	2	SCREW, #10-32 X 1/2 PAN SLT
4	2831851120	-	EA	12	BOLT, 3/8-16 X 1-1/4 HEX HEAD
5	2832-8101	-	EA	12	NUT, 3/8-16 HEX
6	2833-8210	-	EA	12	WASHER, 3/8 SPLIT LOCK
7	29019	-	EA	12	BOLT, 1/4-20 X 1.3 SHOULDER
8	29051	-	EA	29	BOLT, 1/4-20 X 1/2 WITH 1/2 HD
9	32002	-	SQFT	12.5	INSULATION, FIBERGLASS
10	60002	-	EA	1	3/8 ROMEX
11	6093-0102	-	EA	2	TY-RAP
12	9338-0072	A	EA	1	ASSY, DUCT PRESSURE SENSOR
13	93533	D	EA	1	GASKET, 11X12, HIGH TEMP
14	950165	A	EA	1	PYREX VIEWING WINDOW BRACKET
15	950167	A	EA	1	GASKET, PYREX VIEWING WINDOW
16	950168	A	EA	1	PYREX VEIWING WINDOW
17	950178	A	EA	1	FLAME DUCT 11 X 12, BUNGALOW
18	9508-0032	C	EA	1	AIR FLOW SWITCH 950/951/960
19	950819	A	EA	1	QUICK ACCESS CVR W/WNDW
20	9528-0074	B	EA	1	GASKET KIT, 9X9 5HP DUCTWORK
21	952817	A	EA	1	PLATE, SAIL SWITCH & PRESSURE
22	960163	A	EA	1	INSUL BTM BUNGALOW, 11X12 DUCT
23	960164	A	EA	1	INSUL TOP, BUNG 11 X 12 DUCT

REVISION HISTORY				
RE	ECO #	DESCRIPTION	DATE	BY
			7/18/2011	

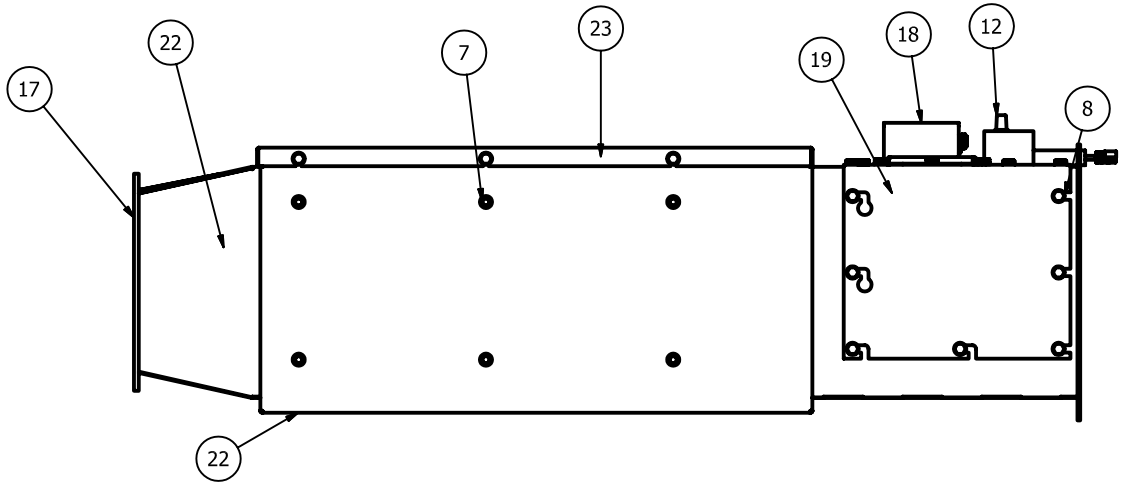

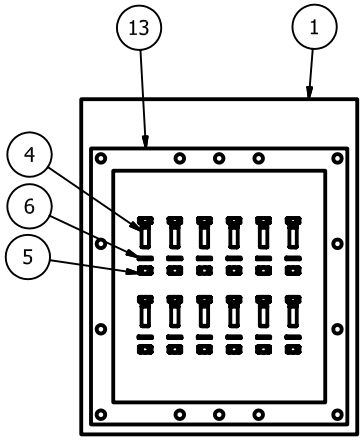

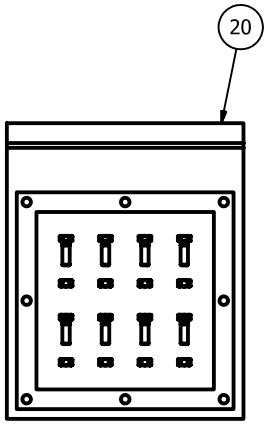

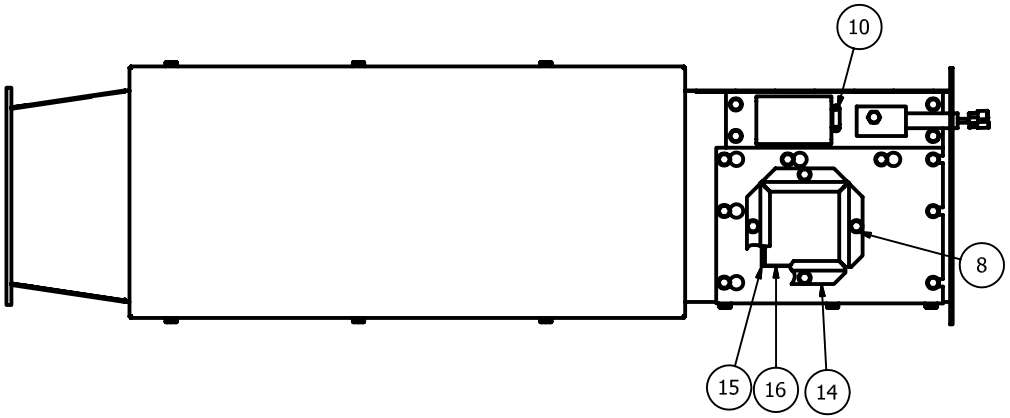

UNLESS OTHERWISE SPECIFIED:
DIMENSIONS ARE IN INCHES
TOLERANCES
DECIMALS .X ± 0.035 .XX ± 0.010 .XXX ± 0.005
ANGULAR ± 1
FRACTIONS ± 1/32
DO NOT SCALE DRAWING

DRAWN: GJONAS

DATE: 07/18/11

MAT'L:

BEND ALLOWANCE:

RAILWAY EQUIPMENT CO.
MINNEAPOLIS, MINNESOTA (763) 972-2200

TITLE: DUCT, FLAME 11X12 BUNGALOW

DWG NO: 9608-3126

REV: A

SCALE:

DWG SIZE: B

SHEET 1 OF 1

ITEM NO.	PART NO.	UOM	QTY	DESCRIPTION
1	952226	EA	1	INSUL COVER, OFFSET DUCT
2	29019	EA	8	SHOULDER BOLT 1/4–20 X 1.3
3	952224	EA	1	DUCT, OFFSET, WITH HEAVY BASE
4	32002	SQ.FT.	6	INSULATION FIBERGLASS
5	9528–0074	EA	1	GASKET KIT, 9X9 5HP FLEX
6	6093–0102	EA	1	TY–RAP

SYM.	E.C.O.	BY	REVISION DESCRIPTION	DATE	APPROVED
A	05–0008	RF	NEW PART	09/07/05	---
–	-- ---	--	---	---	---

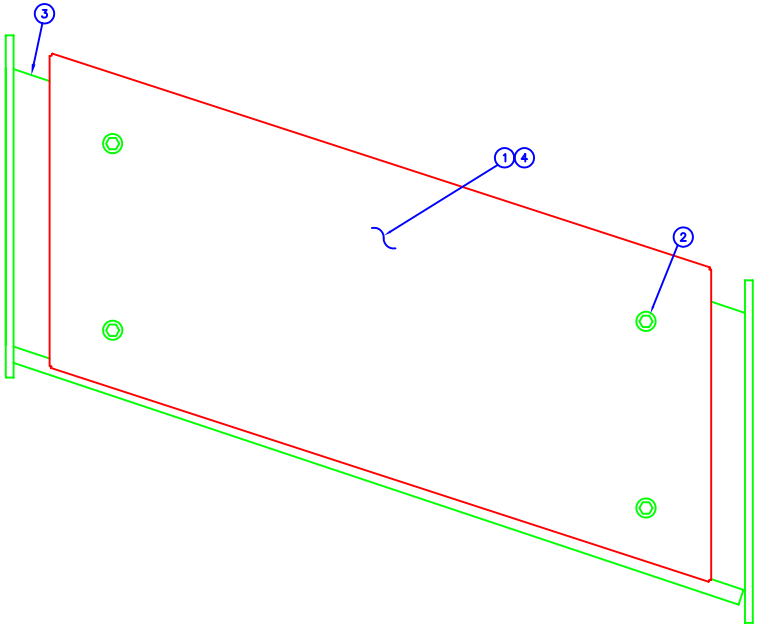

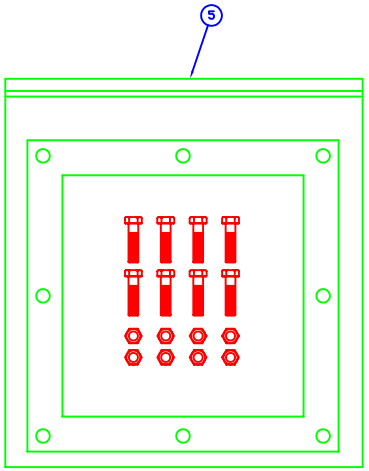

UNLESS OTHERWISE SPECIFIED:
DIMENSIONS ARE IN INCHES
TOLERANCES
DECIMALS .X ± .030 .XX ± .010 .XXX ± .005
ANGULAR ± 0.5°
FRACTIONS ± 1/32
DO NOT SCALE DRAWING

DRAWN RPF

DATE 09/07/05

MATERIAL N/A

BEND ALLOWANCE N/A

RAILWAY EQUIPMENT CO.
DELANO, MINNESOTA (763) 972–2200

TITLE
OFFSET DUCT, 2'
REINFORCED, LIFTOUT
ASSEMBLY / B.O.M.

DWG NO. 9528–3404

REV A

SCALE 1/4 DRAWING SIZE B SHEET 1 OF 1

PARTS LIST					
ITEM	PART NUMBER	REV	UOM	QTY	DESCRIPTION
1	952388	A	EA	1	FLEX WRAP, BOTTOM 2'
2	952389	A	EA	1	FLEX WRAP, BOTTOM 2'
3	29051	-	EA	6	BOLT, 1/4-20 X 1/2 HWH X 1/2 HD
4	952391	A	EA	1	FLEX DUCT, TRANSITION WELDMENT
5	952392	A	EA	1	FLEX DUCT, TRANSITION WELDMENT
6	952394	A	EA	1	RUBBER TUBE 10" ID 11" LONG
7	9528-0074	B	EA	1	GASKET KIT, 9X9 5HP DUCTWORK
8	927237	A	EA	1	COVER PLATE, TEMP SENSOR
9	28105	-	EA	2	CLAMP, HOSE SST 18 INCH
10	R9528-4222	A	EA	1	LABEL, FLEX DUCT TO BLOWER

REVISION HISTORY				
REV	ECO #	DESCRIPTION	DATE	BY
A	08-0003	NEW PART	6/23/10	ES

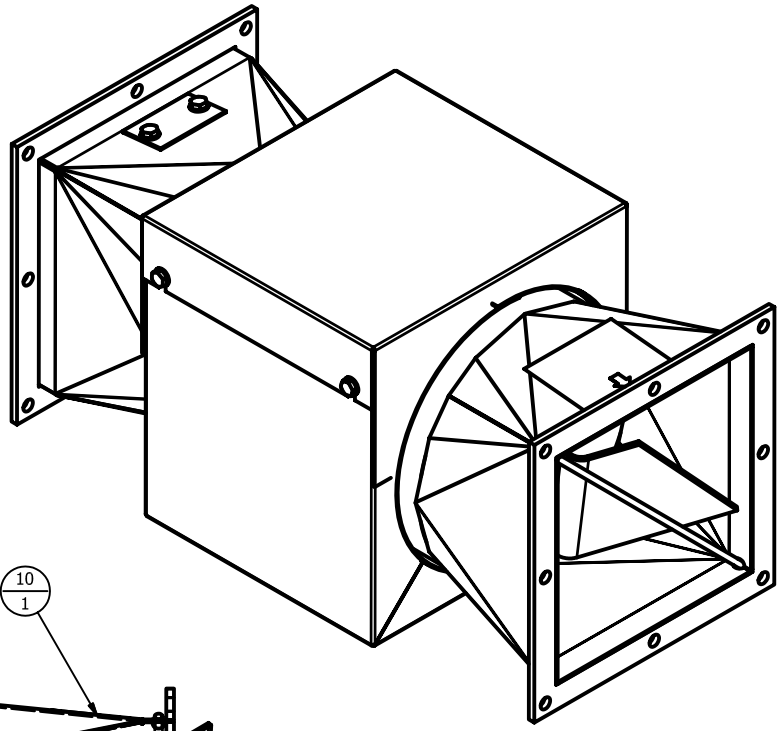

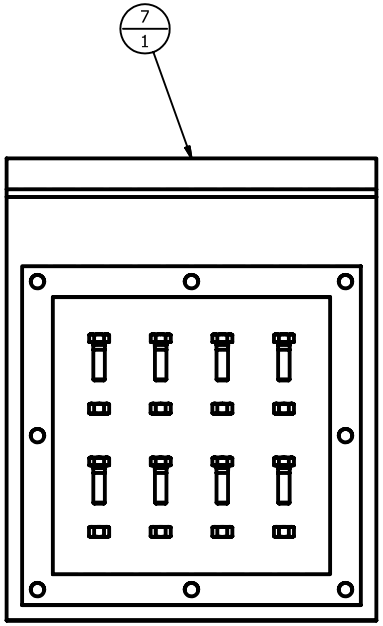

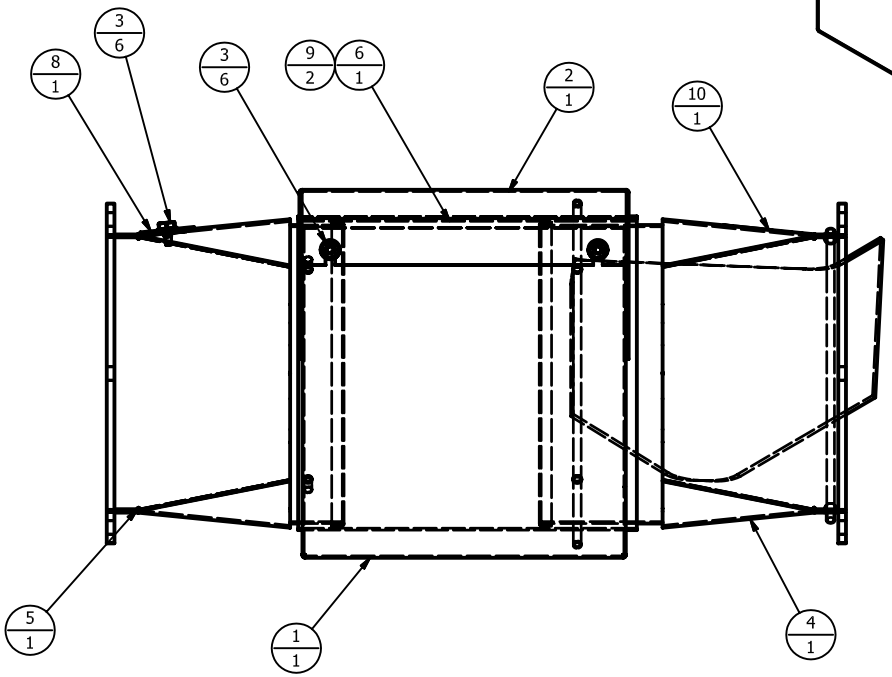

UNLESS OTHERWISE SPECIFIED:
DIMENSIONS ARE IN INCHES
TOLERANCES
DECIMALS .X ± 0.035 .XX ± 0.010 .XXX ± 0.005
ANGULAR ± 0.5
FRACTIONS ± 1/32
DO NOT SCALE DRAWING

DRAWN: EJS

DATE: 06/22/2010

MATL: SEE BOM

BEND ALLOWANCE: N / A

RAILWAY EQUIPMENT CO.
MINNEAPOLIS, MINNESOTA (763) 972-2200

TITLE: FLEX DUCT 2'ST INS W/MIXER
9 X 9 RED RUBBER
(ASSEMBLY / B. O. M.)

DWG NO: 9528-4222

REV: A

SCALE: 1 : 4

DWG SIZE: B

SHEET 1 OF 1

ITEM NO.	PART NO.	UOM	QTY	DESCRIPTION
1	927443	EA	1	TRACK DUCT BASE 5'
2	92740	EA	1	END PLATE, TRACK DUCT
3	92730	EA	1	TRACK DUCT COVER 5'
4	92774	EA	1	TRACK DUCT SUPPORT BRACKET
5	92785	EA	1	DEFLECTOR, TRACK DUCT, SMALL
6	29051	EA	9	BOLT, 1/4-20X1/2 W1/2" HEX HEAD
7	6093-0100	EA	1	TY-RAP, 4" .10 WIDTH

SYM.	E.C.O.	BY	REVISION DESCRIPTION	DATE	APPROVED
A	05-0017	RF	NEW SPLICE SYSTEM	05/24/05	---
B	05-0047	RO	NEW SUPPORT ASSEM DESIGN	10/27/05	---

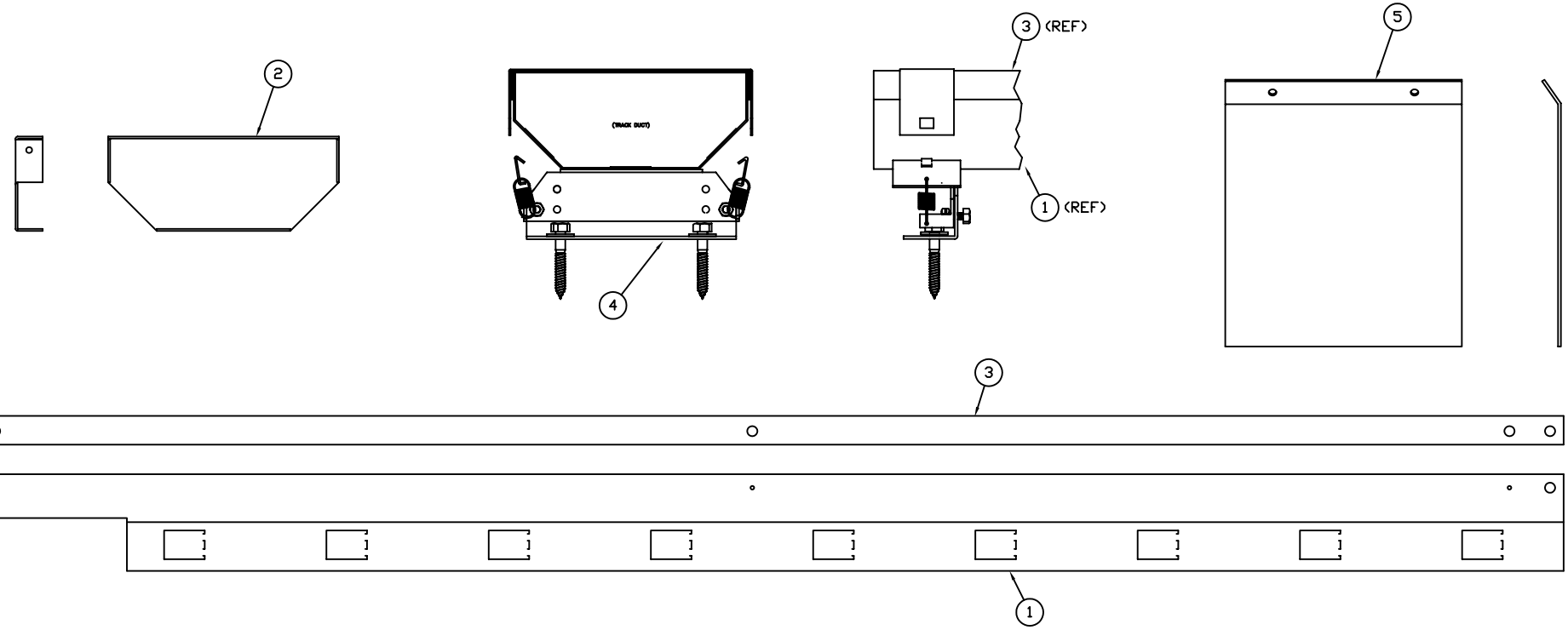

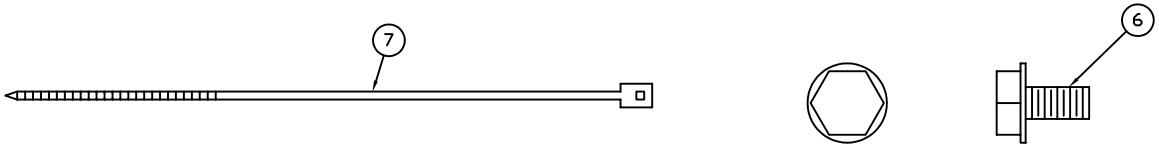

FULL SCALE

UNLESS OTHERWISE SPECIFIED: DIMENSIONS ARE IN INCHES
TOLERANCES
DECIMALS: .X ± .035, .XX ± .010, .XXX ± .005
ANGULAR: ± 0.5°
FRACTIONS: ± 1/32
DO NOT SCALE DRAWING

DRAWN: RPF
DATE: 05/24/05
MATERIAL: SEE PRINT
BEND ALLOWANCE: N/A

RAILWAY EQUIPMENT CO.
DELANO, MINNESOTA (763) 972-2200

TITLE: TRACK DUCT
5' POINT LTD
ASSEMBLY / B.O.M.

DWG NO. 9278-0226 REV B
SCALE 1/4 DRAWING SIZE B SHEET 1 OF 1

ITEM NO.	PART NO.	UOM	QTY	DESCRIPTION
1	92735	EA	1	TRACK DUCT BASE 5'
2	92730	EA	1	TRACK DUCT COVER 5'
3	927441	EA	1	CENTER COVER, E.Z. SPLICE
4	927442	EA	2	END COVER, E.Z. SPLICE
5	927450	EA	1	BASE, E.Z. SPLICE
6	92774	EA	1	TRACK DUCT SUPPORT BRACKET
7	29051	EA	6	BOLT, 1/4-20X1/2 W1/2" HEX HEAD
8	6093-0100	EA	1	TY-RAP, 4" .10 WIDTH

SYM.	E.C.O.	BY	REVISION DESCRIPTION	DATE	APPROVED
A	05-0017	RF	NEW SPLICE SYSTEM	05/24/05	---
B	05-0047	RO	NEW SUPPORT ASSM DESIGN	10/27/05	---

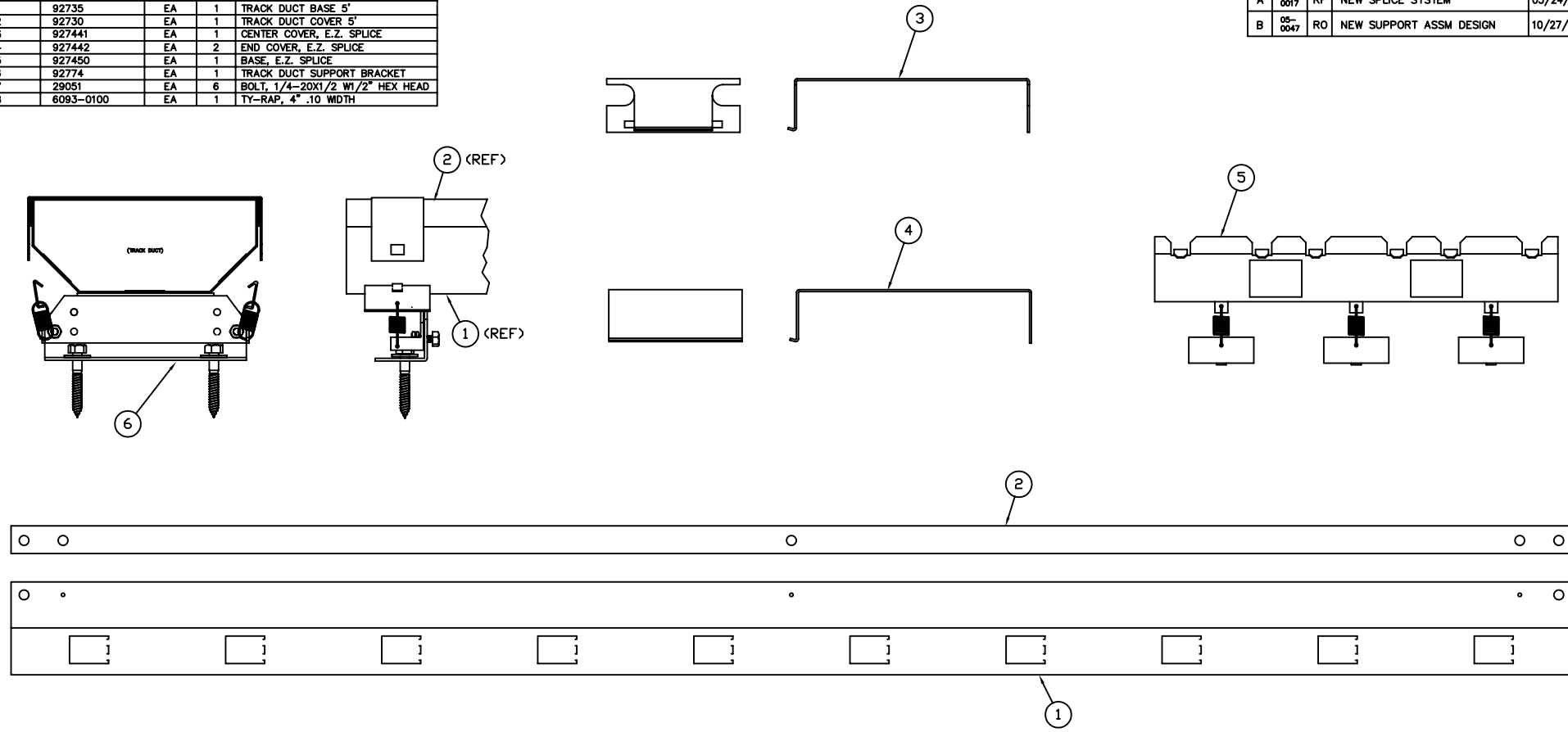

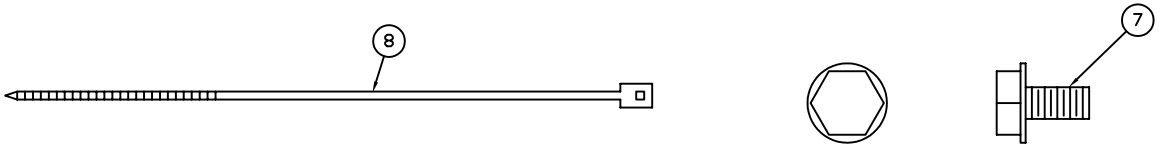

FULL SCALE

UNLESS OTHERWISE SPECIFIED: DIMENSIONS ARE IN INCHES
TOLERANCES
DECIMALS .X ± .035 .XX ± .010 .XXX ± .005
ANGULAR ± 0.5°
FRACTIONS ± 1/32
DO NOT SCALE DRAWING

DRAWN RPF

DATE 05/24/05

MATERIAL SEE PRINT

BEND ALLOWANCE N/A

RAILWAY EQUIPMENT CO.
DELANO, MINNESOTA (763) 972-2200

TITLE
TRACK DUCT
5' MID
ASSEMBLY / B.O.M.

DWG NO. 9278-0227 REV B

SCALE 1/4 DRAWING SIZE B SHEET 1 OF 1

ITEM NO.	PART NO.	UOM	QTY	DESCRIPTION
1	927538	EA	1	TRACK DUCT BASE 10'
2	92741	EA	1	TRACK DUCT COVER 10'
3	927441	EA	1	CENTER COVER, E.Z. SPLICE
4	927442	EA	2	END COVER, E.Z. SPLICE
5	927450	EA	1	BASE, E.Z. SPLICE
6	92774	EA	1	TRACK DUCT SUPPORT BRACKET
7	29051	EA	6	BOLT, 1/4-20X1/2 W1/2" HEX HEAD
8	6093-0100	EA	1	TY-RAP, 4" .10 WIDTH

SYM.	E.C.O.	BY	REVISION DESCRIPTION	DATE	APPROVED
J	-- ---	TB	REMOVE 92744, 28080, 28081	05/26/99	---
K	02-0045	RF	REPLACE 29016 W/29051	08/29/02	---
L	05-0017	RF	NEW SPLICE SYSTEM	05/18/05	---
M	05-0047	RO	NEW SUPPORT ASSEM. DESIGN	10/27/05	---

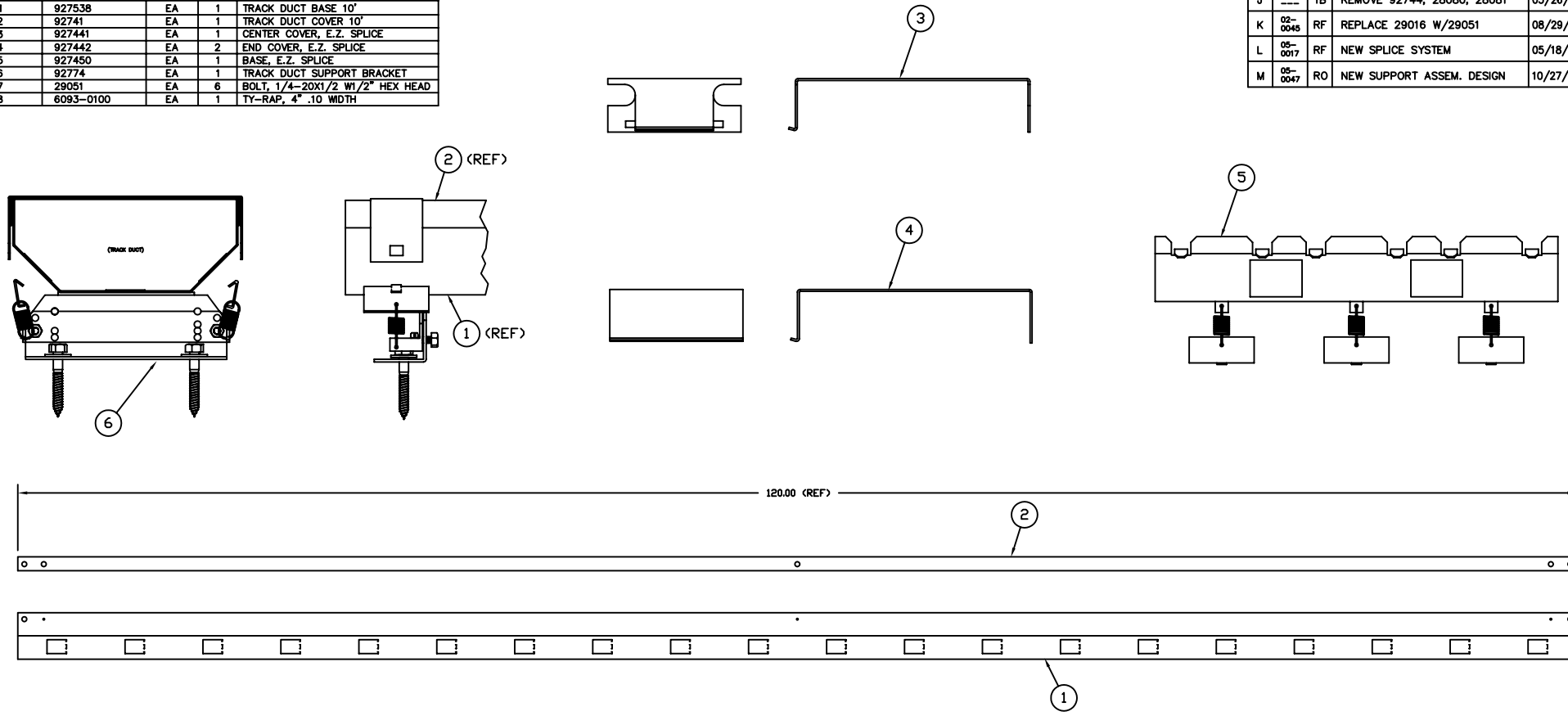

1/8 SCALE

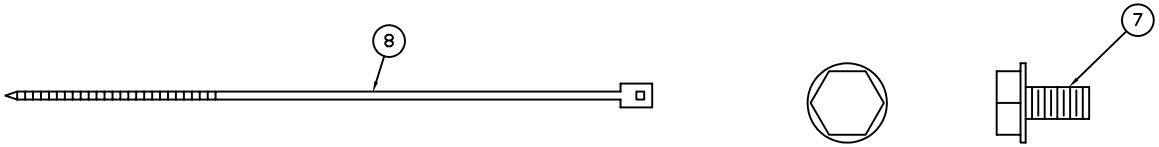

FULL SCALE

UNLESS OTHERWISE SPECIFIED: DIMENSIONS ARE IN INCHES
TOLERANCES
DECIMALS .X ± .035 .XX ± .010 .XXX ± .005
ANGULAR ± 0.5°
FRACTIONS ± 1/32
DO NOT SCALE DRAWING

DRAWN RPF

DATE 02/15/93

MATERIAL SEE PRINT

BE & BEND ALLOWANCE N/A

RAILWAY EQUIPMENT CO.
DELANO, MINNESOTA (763) 972-2200

TITLE
TRACK DUCT
10' MID
ASSEMBLY / B.O.M.

DWG NO. 9278-1201

REV M

SCALE 1/4 DRAWING SIZE B SHEET 1 OF 1

ITEM NO.	PART NO.	UOM	QTY	DESCRIPTION
1	927538	EA	1	TRACK DUCT BASE 10'
2	92740	EA	1	END PLATE, TRACK DUCT
3	92741	EA	1	TRACK DUCT COVER 10'
4	927441	EA	1	CENTER COVER, E.Z. SPLICE
5	927442	EA	2	END COVER, E.Z. SPLICE
6	927450	EA	1	BASE, E.Z. SPLICE
7	92774	EA	1	TRACK DUCT SUPPORT BRACKET
8	92785	EA	1	DEFLECTOR, TRACK DUCT, SMALL
9	29051	EA	9	BOLT, 1/4-20X1/2 W1/2" HEX HEAD
10	6093-0100	EA	1	TY-RAP, 4" .10 WIDTH

SYM.	E.C.O.	BY	REVISION DESCRIPTION	DATE	APPROVED
J	---	TB	UPDATE TRACK DUCT SUPPORT	05/26/99	---
K	02-0045	RF	REPLACE 29016 W/29051	08/29/02	---
L	05-0017	RF	NEW SPLICE SYSTEM	05/18/05	---
M	05-0047	RO	NEW SUPPORT ASSM DESIGN	10/27/05	---

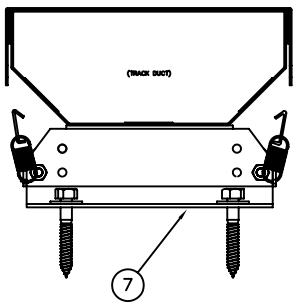

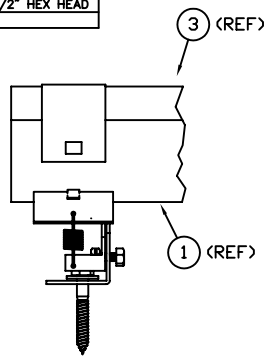

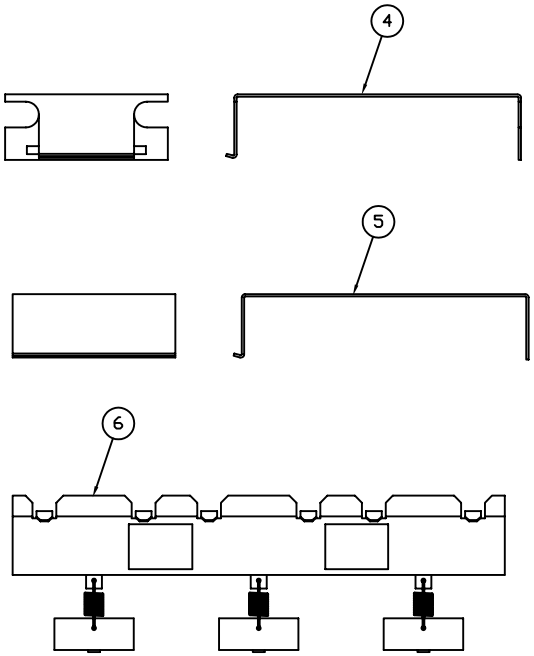

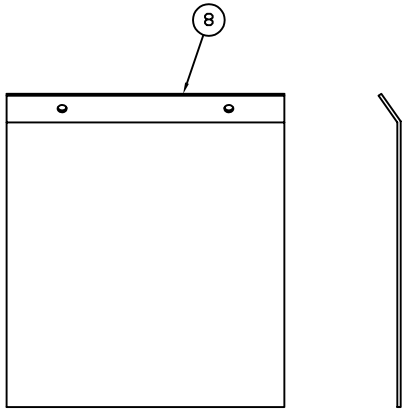

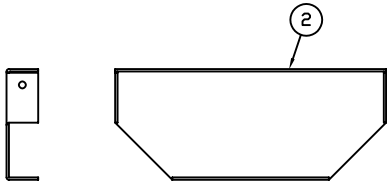

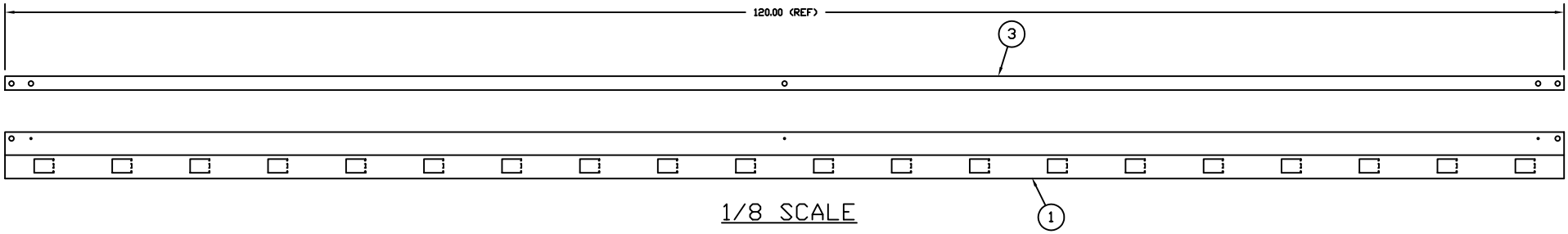

1/8 SCALE

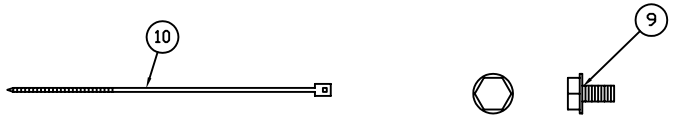

1/2 SCALE

UNLESS OTHERWISE SPECIFIED: DIMENSIONS ARE IN INCHES
TOLERANCES
DECIMALS .X ± .035 .XX ± .010 .XXX ± .005
ANGULAR ± 0.5°
FRACTIONS ± 1/32
DO NOT SCALE DRAWING

DRAWN RPF

DATE 02/15/93

MATERIAL SEE PRINT

DIE & BEND ALLOWANCE N/A

RAILWAY EQUIPMENT CO.
DELANO, MINNESOTA (763) 972-2200

TITLE
TRACK DUCT
10' HEEL
ASSEMBLY / B.O.M.

DWG NO. 9278-1202

REV M

SCALE 1/4 DRAWING SIZE B SHEET 1 OF 1

ITEM NO.	PART NO.	UOM	QTY	DESCRIPTION
1	9278–0207	EA	1	TRACK DUCT 7' HEEL
2	9278–0027	EA	1	ISO KIT, TR NOZZLE LARGE
3	927490	EA	1	NOZZLE, TRACK DUCT
4	41023	EA	1	BOX, TRACK DUCT KIT

SYM.	E.C.O.	BY	REVISION DESCRIPTION	DATE	APPROVED
A	02–0027	RF	NEW PART	07/03/02	---
B	03–0023	RF	UPDATE NOZZLE	07/29/03	---
C	05–0017	RF	NEW SPLICE DESIGN	05/25/05	---
D	05–0047	RO	NEW TRACK DUCT NOZZLE	11/10/05	---
E	06–0024	RJ	NEW TRACK DUCT NOZZLE	02/02/07	---

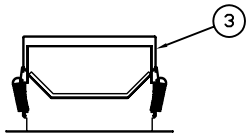

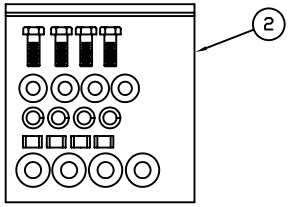

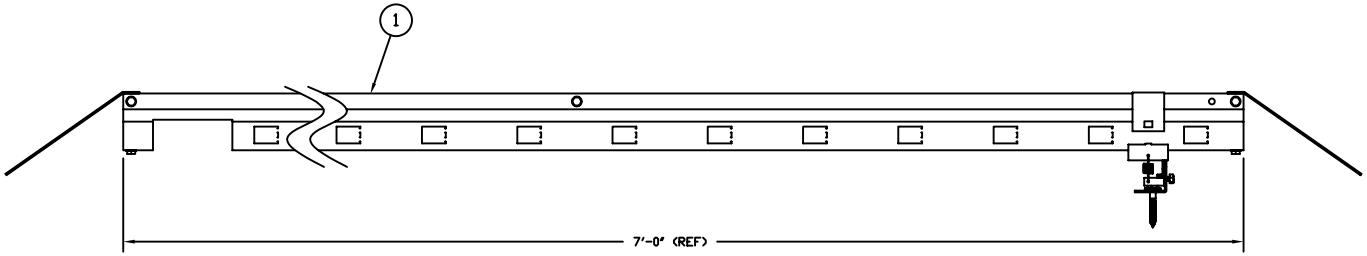

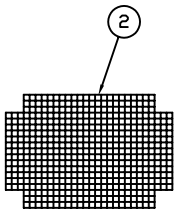

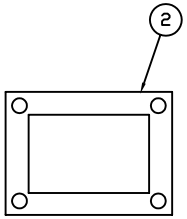

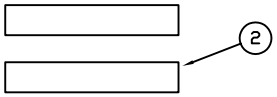

UNLESS OTHERWISE SPECIFIED:
DIMENSIONS ARE IN INCHES
TOLERANCES
DECIMALS ANGULAR
.X ± .035 ± 0.5°
.XX ± .010 FRACTIONS
.XXX ± .005 ± 1/32
DO NOT SCALE DRAWING

RAILWAY EQUIPMENT CO.
DELANO, MINNESOTA (763) 972–2200

TITLE
TRACK DUCT KIT, 7'
LARGE NOZZLE

DRAWN	RPF
DATE	07/03/02
MATERIAL	N/A
BEND ALLOWANCE	N/A
DWG NO.	9278–0270
REV	E
SCALE	N/A
DRAWING SIZE	B
SHEET	1 OF 1

ITEM NO.	PART NO.	UOM	QTY	DESCRIPTION
1	92745	EA	1	HOLDDOWN STRAP, TRACK DUCT
2	927550	EA	1	TRACK DUCT SUPPORT BASE
3	927551	EA	1	TRACK DUCT SPRING BRKT
4	92742	EA	2	SPRING, TRACK DUCT SUPPORT BRKT
5	92743	EA	2	SPRING CLIP, TRCK DUCT SUP.BRKT
6	2831551110	EA	2	1/4-20 X 5/8 HEX BOLT #5 HARD
7	2832-5901	EA	2	1/4-20 CENTERLOCK NUT
8	2833-8110	EA	2	3/8 FLAT WASHER
9	28045	EA	2	LAG BOLT 3/8 X 2.5
10	14042	EA	1	BAG, ZIPLOCK 4 x 6 x .002
11	14045	EA	1	BAG, ZIPLOCK 12 x 15 x .004

SYM.	E.C.O.	BY	REVISION DESCRIPTION	DATE	APPROVED
D		EFK	REDESIGN FOR SPRING MOUNT.	6/21/91	
E		EFK	CHG. P/N 927135 REV.B TO 927135 REV.C	9/25/92	
F		EFK	CHG. P/N 92742 REV.A TO 92742 REV.B	7/8/94	
G		TB	ADD ITEMS 10 THRU 15	5.26.99	
H	01-0019	TB	#92743B WAS 92743A	4.11.01	
J	05-0017	RF	NEW SPLICE SYSTEM	05/18/05	
K	05-0047	RO	SHORTENED 927550-551	10/27/05	

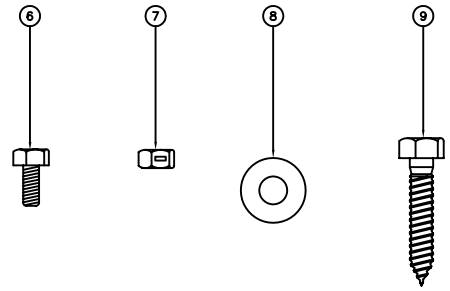

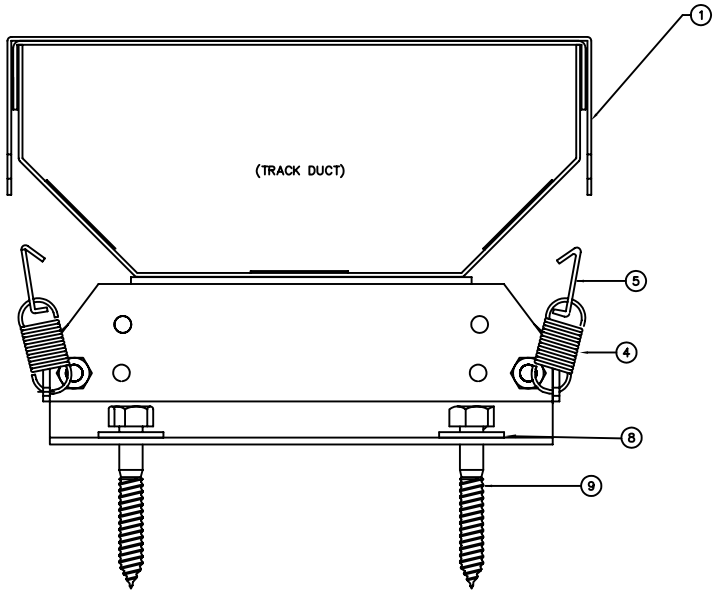

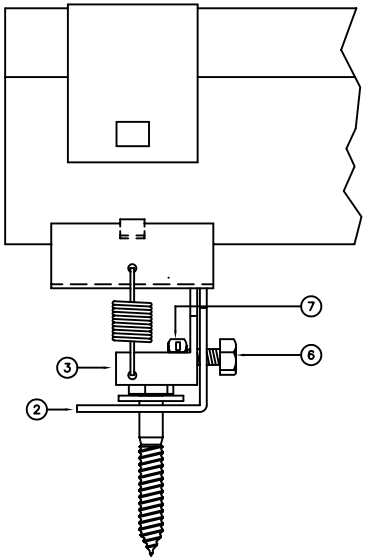

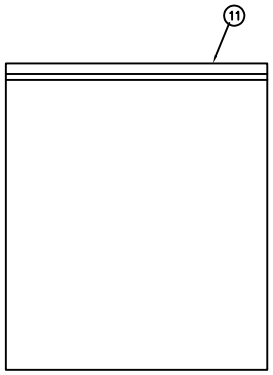

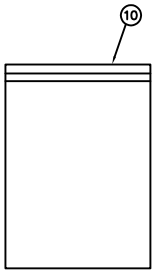

FORMED HOLES
"F" INDICATES FORMED INTO DRAWING
"U" INDICATES FORMED UP FROM DRAWING
REF.SCHEMATIC NO.
REF.CONNECTION DIA.
CAD NO.
MADE FROM

UNLESS OTHERWISE SPECIFIED
ALL BENDS ARE 90°
ALL BENDS HAVE MIN. RADIUS
DIMENSIONS ARE IN INCHES
TOLERANCE ON
FRACTIONS ± 1/32
DECIMALS .XX±.03 .XXX±.010 .XXXX±.005
ANGLES ±1.00°
MATERIAL
FINISH

DRAWN BY EFK
DATE 6/21/91
CHECKED BY
DATE
APPROVED BY
DATE
SHEET 1 OF 1

RAILWAY EQUIPMENT CO.
DELANO, MINNESOTA (763) 972-2200

TITLE
TRACK DUCT
SUPPORT BRKT
SUB-ASSEMBLY

DWG NO. 92774
REV. K

PARTS LIST					
ITEM	PART NUMBER	REV	UOM	QTY	DESCRIPTION
1	21016	-	EA	1	CONNECTOR, HOUSING, 10 POS
2	21017	-	EA	1	STRAIN RELIEF, 10 POS
3	21020	-	EA	2	CONNECTOR, HOUSING, 2 POS
4	21021	-	EA	2	STRAIN RELIEF, 2 POS
5	21023	-	EA	1	STRAIN RELIEF, 3 POS
6	21212	-	EA	1	CONNECTOR, HOUSING, 3 POS 18GA
7	28029	-	EA	1	TERMINAL ASSY, 1 X 12 POS
8	28090	-	EA	1	CAP, TERMINAL POST INSULATING
9	28091	-	EA	1	SHIELD, TERMINAL POST INSULATE
10	2831211106	-	EA	3	SCREW, #6-32 X 3/8 PAN SLT
11	2831311106	-	EA	8	SCREW, #8-32 X 3/8 PAN SLT
12	2831411106	-	EA	9	SCREW, #10-32 X 3/8 PAN SLT
13	2831411110	-	EA	3	SCREW, #10-32 X 5/8 PAN SLT
14	2833-3110	-	EA	1	WASHER, #8 FLAT SAE
15	2833-4310	-	EA	2	WASHER, #10 EXT. STAR
16	45184	-	EA	1	OVERLOAD RELAY, 240V 5HP MOTOR
17	45185	-	EA	1	CONTACTOR, 3 POLE, 115V COIL
18	51204	-	EA	1	BRACKET, GE CIRCUIT BREAKER
19	51205	-	EA	1	CIR BRKR, 50A 240V 2 POLE
20	6031-0103	-	EA	1	LUG, FORK #10 22-18GA NYLON
21	6032-0110	-	EA	11	LUG, RING 1/4 22-18GA NYLON
22	6032-0111	-	EA	3	LUG, RING #10 16-14GA NYLON
23	6032-0112	-	EA	3	LUG, RING 1/4 16-14GA NYLON
24	6034-0102	-	EA	3	LUG, PUSH-ON F .250 22-18GA
25	6090-0102	-	EA	1	CABLE TIE MOUNTS
26	6093-0004	-	IN	18	WIRE DUCT, 1.5IN X 3IN
27	6093-0303	-	IN	18	WIRE DUCT, COVER 1.5 IN
28	680801	-	IN	56	WIRE, 8GA BLACK
29	681601	-	IN	36	WIRE, 16GA GREEN - HOOK UP
30	681832	-	IN	63	WIRE, 18GA 300V 105C BLACK
31	681833	-	IN	39	WIRE, 18GA THINWALL WHITE 300V
32	681834	-	IN	59	WIRE, 18GA THINWALL RED 300V
33	681835	-	IN	134	WIRE, 18GA THINWALL BROWN 300V
34	681836	-	IN	190	WIRE, 18GA THINWALL BLUE 300V
35	9338-0015	C	EA	1	TRANSFORMER, CONTROL MODULE
36	9338-0320	J	EA	1	CONTROL MODULE, GHAB W/ DISP
37	9338-0325	B	EA	1	SURGE ARRESTOR ASSY, 240V 1PH
38	95075	B	EA	1	PANEL, ELECTRIC HAB
39	9508-0037	A	EA	1	ASSY, CURRENT COIL 100A AC
40	R9330-0021	B	EA	1	LABEL, TERM POST SNO NET

REVISION HISTORY				
REV	ECO #	DESCRIPTION	DATE	BY
A	09-0012	NEW PART	9/10/09	ES
B	11-0014	NEW MODULE	07/08/11	GJ

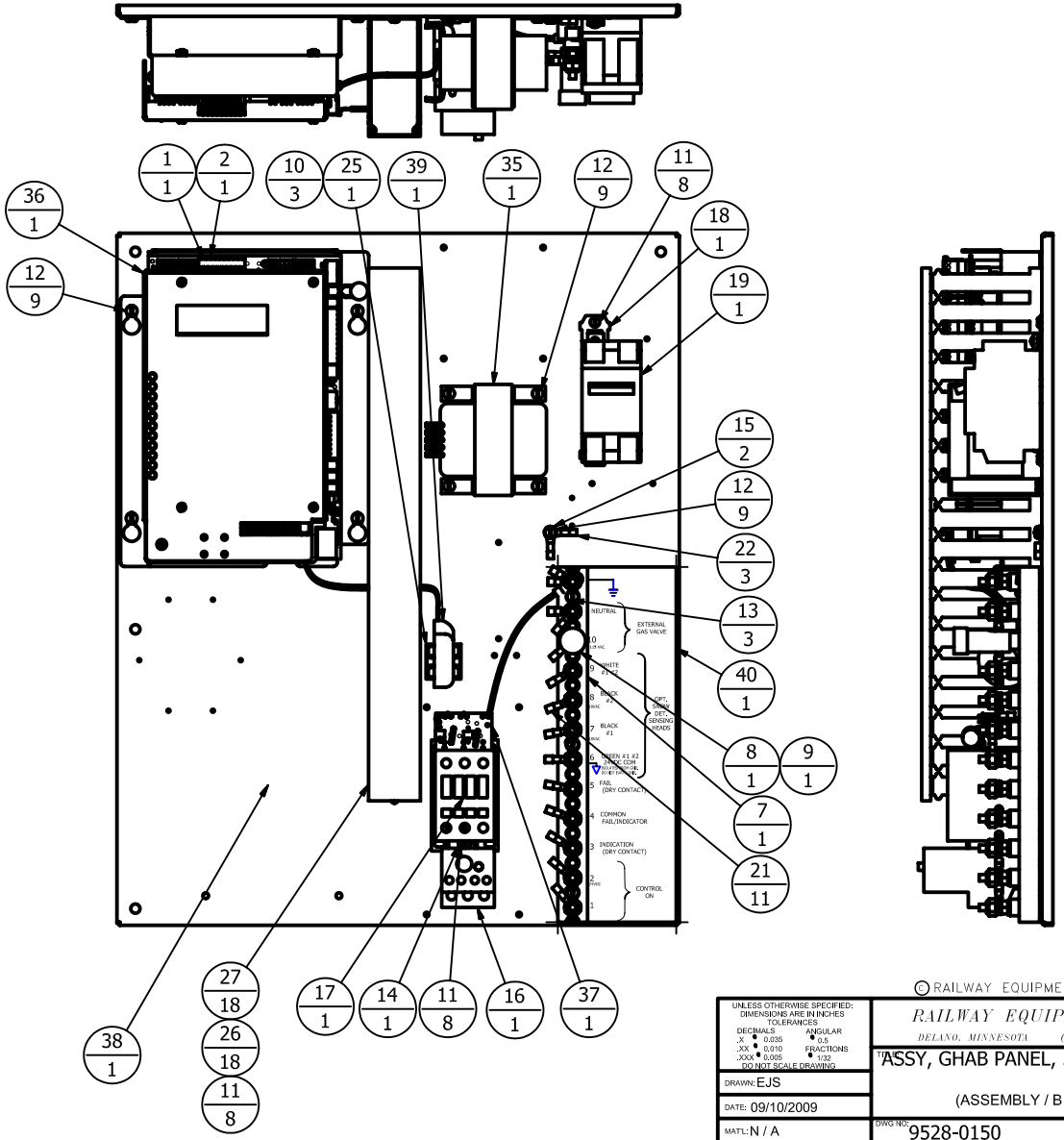

UNLESS OTHERWISE SPECIFIED: DIMENSIONS ARE IN INCHES
TOLERANCES
DECIMALS .X ± 0.035 .XX ± 0.010 .XXX ± 0.005
ANGULAR ± 0.5
FRACTIONS ± 1/32
DO NOT SCALE DRAWING

RAILWAY EQUIPMENT CO.
DELANO, MINNESOTA (763) 972-2200

TITLE: ASSY, GHAB PANEL, 5HP 230V 1PH

(ASSEMBLY / B. O. M.)

DRAWN: EJS
DATE: 09/10/2009
MATL: N / A
BEND ALLOWANCE: N / A
DWG NO: 9528-0150
REV: B
SCALE: 1 : 4
DWG SIZE: B
SHEET 1 OF 1

SYM.	E.C.O.	BY	REVISION DESCRIPTION	DATE	APPROVED
A	11-0014	GJ	NEW MODULE	07/05/11	

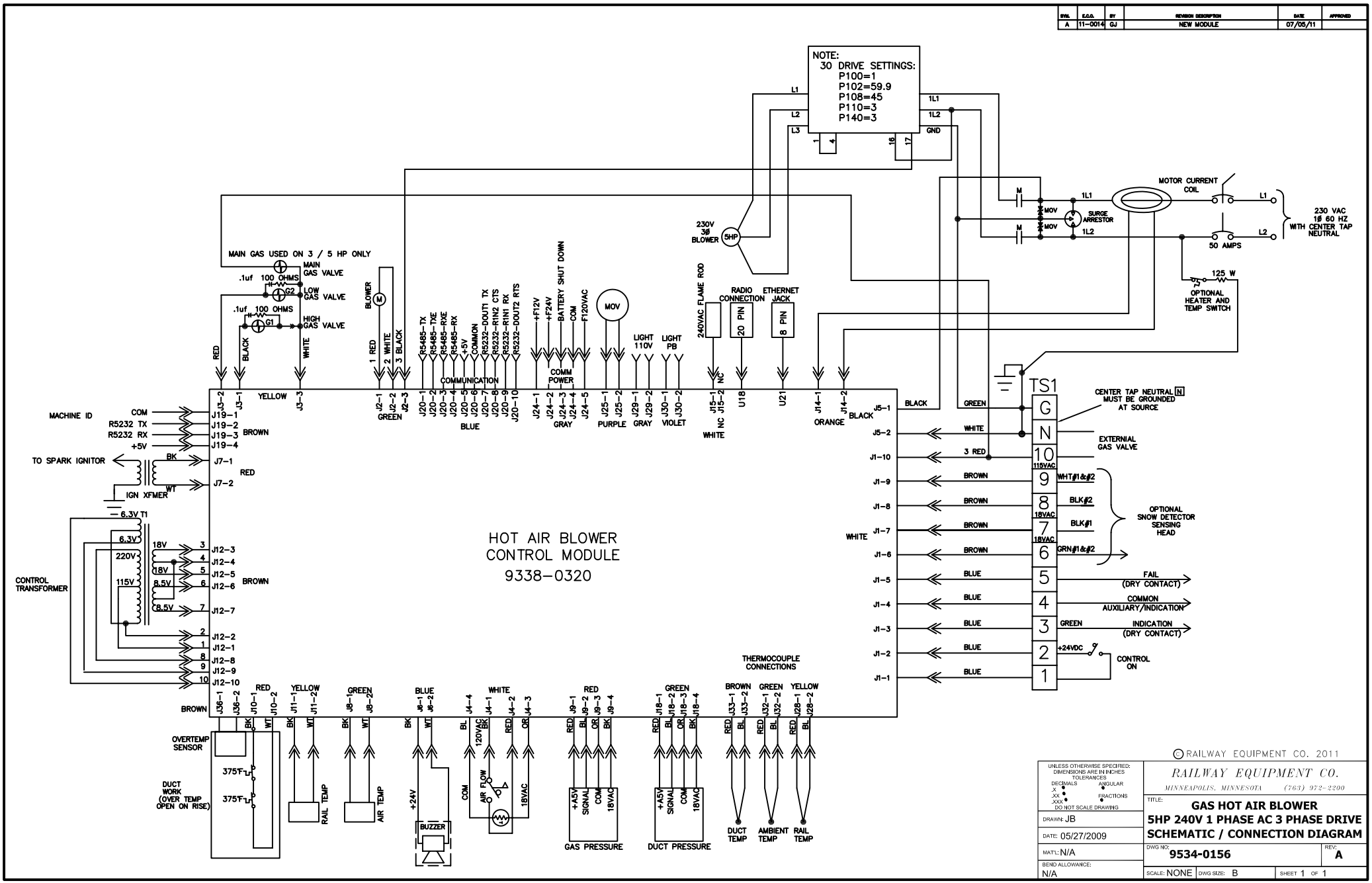

UNLESS OTHERWISE SPECIFIED: DIMENSIONS ARE IN INCHES TOLERANCES DECIMALS .X .XX .XXX ANGULAR FRACTIONS DO NOT SCALE DRAWING

RAILWAY EQUIPMENT CO.
MINNEAPOLIS, MINNESOTA (763) 972-2200

TITLE: **GAS HOT AIR BLOWER 5HP 240V 1 PHASE AC 3 PHASE DRIVE SCHEMATIC / CONNECTION DIAGRAM**

DRAWN: JB
DATE: 05/27/2009
MAT'L: N/A
BEND ALLOWANCE: N/A
DWG NO: 9534-0156
REV: A
SCALE: NONE
DWG SIZE: B
SHEET 1 OF 1

SYM.	E.C.O.	BY	REVISION DESCRIPTION	DATE	APPROVED
	-- ---				
B	---	JB	REVISION B	2/24/09	
C	---	GJ	NEW MODULE	07/05/11	

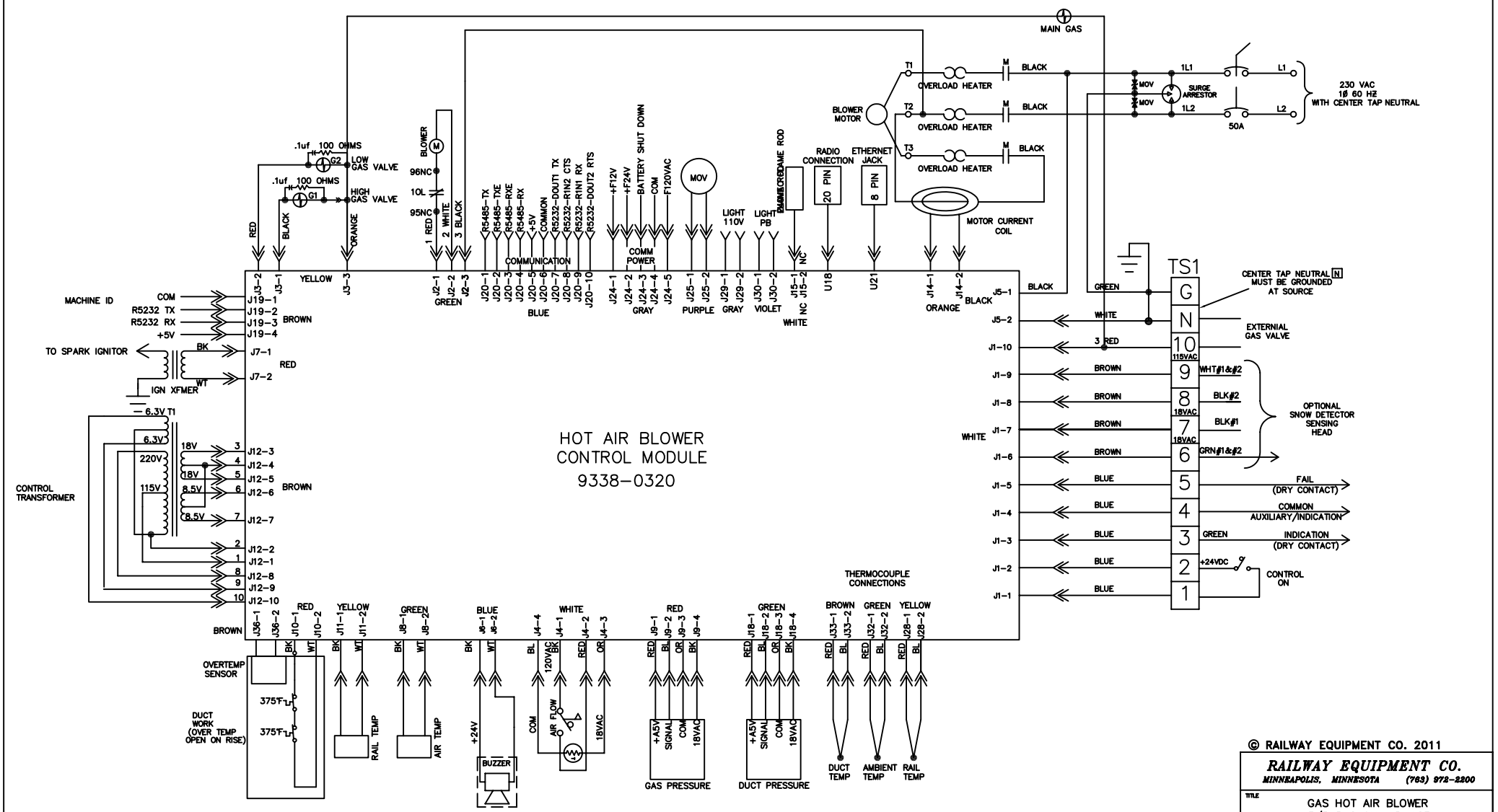

RAILWAY EQUIPMENT CO.
MINNEAPOLIS, MINNESOTA (763) 972-2200

TITLE
GAS HOT AIR BLOWER
3/5HP 240V 1 PHASE
SCHEMATIC / CONNECTION DIAGRAM

DWG NO.	REV
9524-0223	C

DRAWING BY WS | DRAWING SIZE A | SHEET 1 OF 1

SYM.	E.C.O.	BY	REVISION DESCRIPTION	DATE	APPROVED
A	11-0014	GJ	NEW MODULE	07/05/11	

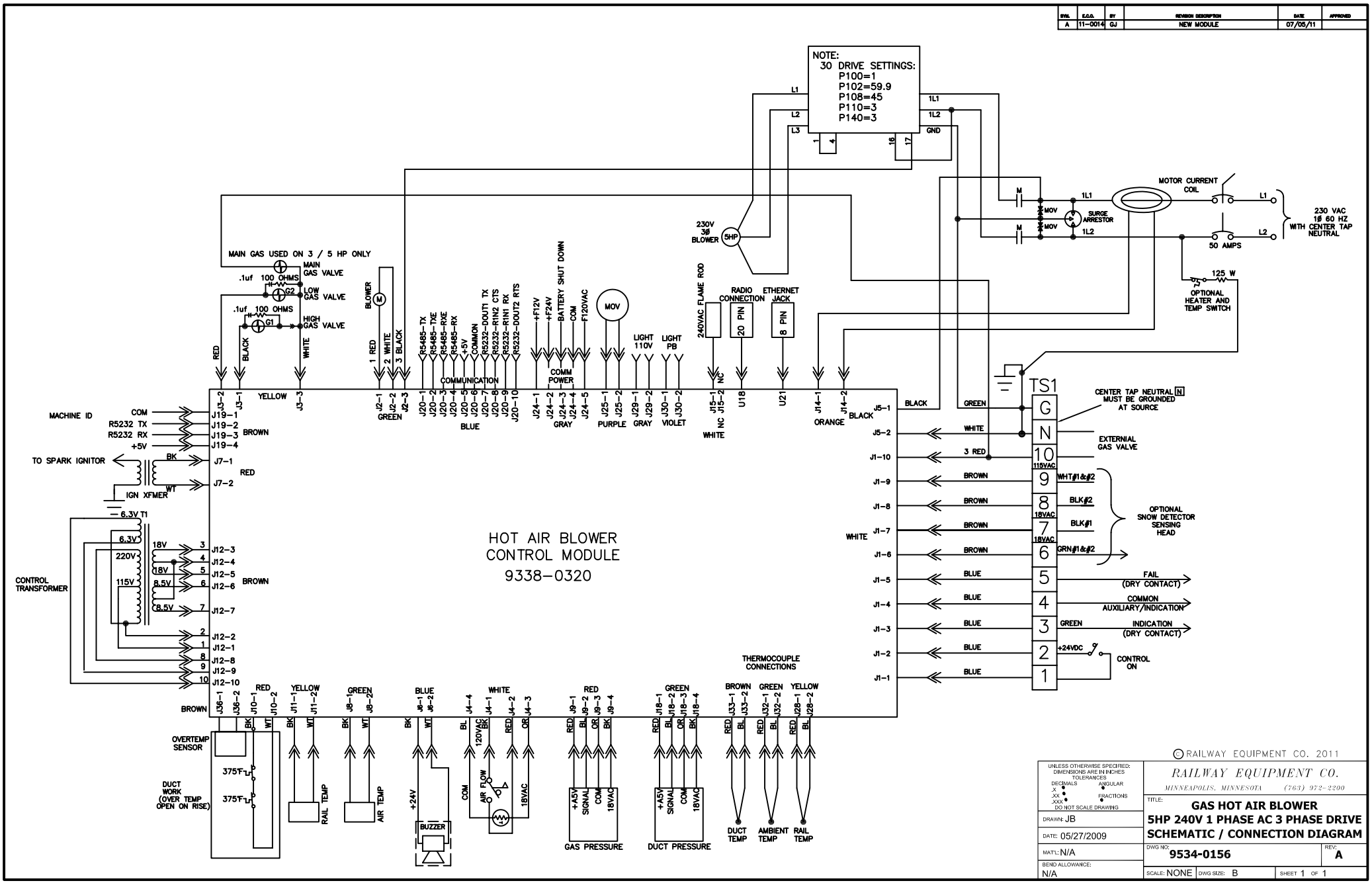

UNLESS OTHERWISE SPECIFIED: DIMENSIONS ARE IN INCHES TOLERANCES DECIMALS .X .XX .XXX ANGULAR FRACTIONS DO NOT SCALE DRAWING

RAILWAY EQUIPMENT CO.
MINNEAPOLIS, MINNESOTA (763) 972-2200

TITLE: **GAS HOT AIR BLOWER 5HP 240V 1 PHASE AC 3 PHASE DRIVE SCHEMATIC / CONNECTION DIAGRAM**

DRAWN: JB
DATE: 05/27/2009
MAT'L: N/A
BEND ALLOWANCE: N/A
DWG NO: 9534-0156
REV: A
SCALE: NONE
DWG SIZE: B
SHEET 1 OF 1

SYM.	E.C.O.	BY	REVISION DESCRIPTION	DATE	APPROVED

B	---	JB	REVISION B	2/24/09	
C	09-0014	ES	ADDED 208/230VAC	7/7/09	
D	11-0014	GJ	NEW MODULE	07/05/11	

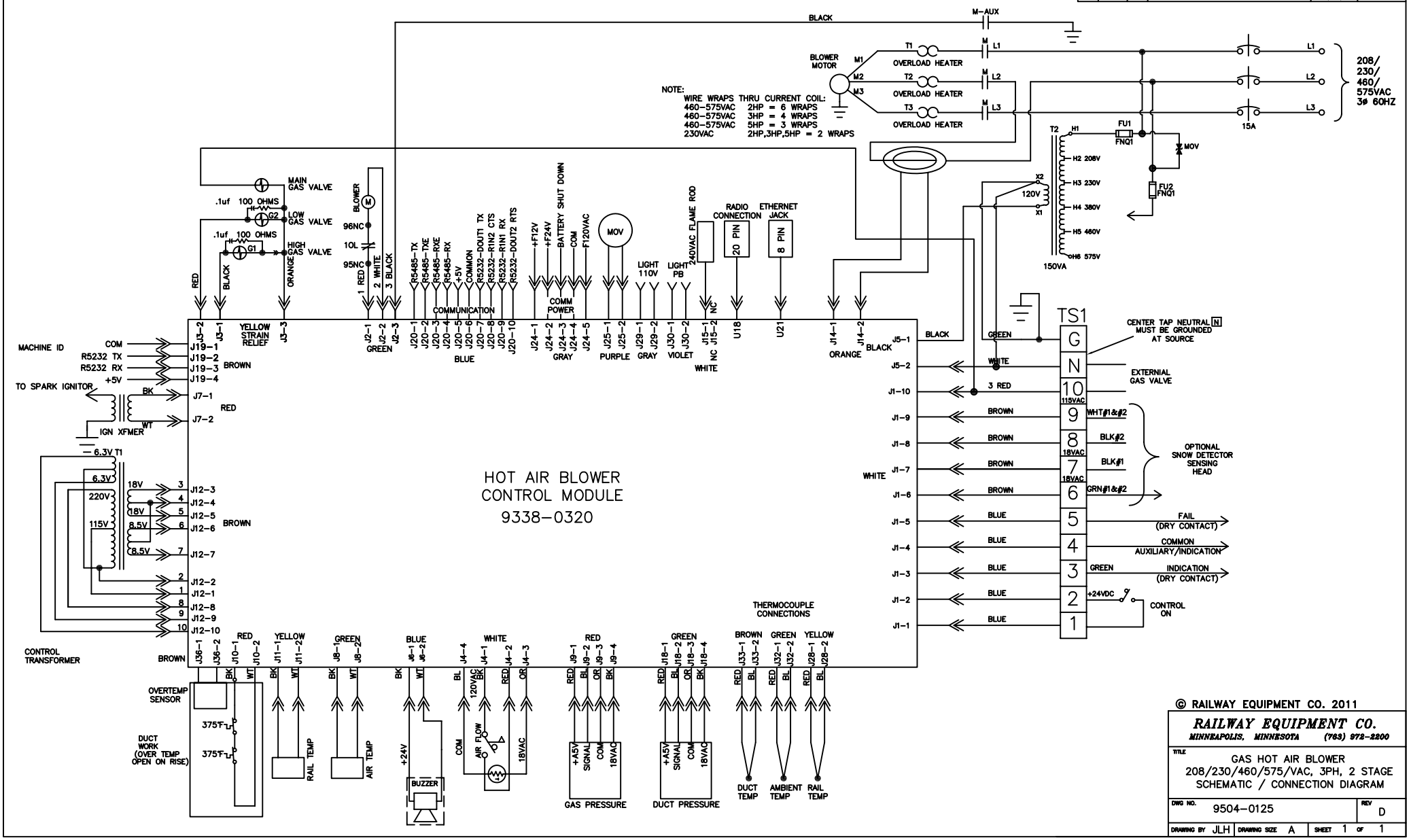

PARTS LIST					
ITEM	PART NUMBER	REV	UOM	QTY	DESCRIPTION
1	45155	-	EA	2	VALVE, COMBUSTION
2	60226	-	EA	1	TEE, 1 X 1 X 3/4 SCH 40
3	61028	-	EA	1	UNION, 1 IN SCH 40 BLACK
4	61025	-	EA	3	NIPPLE, 1 X 2 IN SCH 40 BLACK
5	60234	-	EA	1	TEE, 3/4 X 3/4 X 1/4 SCH 40 BLK
6	9338-0070	A	EA	1	ASSY, GAS PRESSURE SENSOR
7	61012	-	EA	2	NIPPLE, 3/4 X 2 SCH 40 BLACK
8	953611	A	EA	1	OUTLET MANIFOLD, GASLINE 3/5HP
9	60231	-	EA	4	O-RING, BUNA-N, 3/16 WIDE
10	953620	B	EA	1	UNIVERSAL ORIFICE PLATE 5HP
11	953612	A	EA	1	COUPLING PLATE 1 INCH NPT
12	61060	-	EA	1	NIPPLE, 1 X 8 IN SCH 40 BLACK
13	61032	-	EA	1	NIPPLE, 1 X 3 IN SCH 40 BLACK
14	45035	-	EA	1	VALVE, K3A552, 0-3PSI GAS
15	60197	-	EA	1	FLEX HOSE 3/4 X 18 - 5/8 OD
16	61013	-	EA	1	NIPPLE, 3/4 X 3 SCH 40 BLACK
17	2833-5115	-	EA	8	WASHER, 1/4 FLAT SS
18	2833-5241	-	EA	8	WASHER, 1/4 SPLIT LOCK SS
19	2831551134	-	EA	8	BOLT, 1/4-20 X 1-3/4 HEX SS
20	933612	D	EA	1	COUPLING PLATE 3/4 NPT
21	6092-0201	-	EA	9	LUG, WIRE JOINT NYLON
25	9338-0043	B	EA	3	SNUBBER ASSEMBLY, GAS VALVE
27	21023	-	EA	1	STRAIN RELIEF, 3 POS
28	21212	-	EA	1	CONNECTOR, HOUSING, 3POS 18GA
29	6032-0110	-	EA	1	LUG, RING 1/4 22-18GA NYLON
30	60035	-	EA	2	BUSHING, 1/2 IN PLASTIC INSUL
31	60241	-	FT	7.5	CABLE 4 COND. 18GA
32	60002	-	EA	4	3/8 ROMEX
33	681820	A	IN	18	CORD, STRAIGHT 18/2 SJTOW
34	60011	-	EA	1	CONNECTOR, CORD 1/2INCH STRT
35	60160	-	EA	1	CONDUIT, LOCK NUT 1/2 IN

GAS VALVE WIRING DIAGRAM

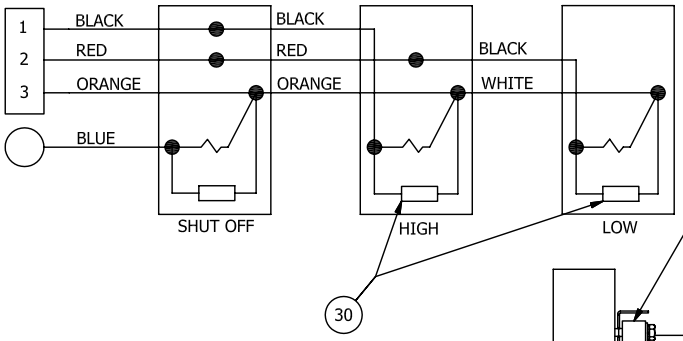

REVISION HISTORY				
REV	ECO	DESCRIPTION	DATE	BY
A	06-	NEW ASSEMBLY	11/17/2006	RMJ
B	10-0031	REMOVED CONDUIT	12/28/10	MF

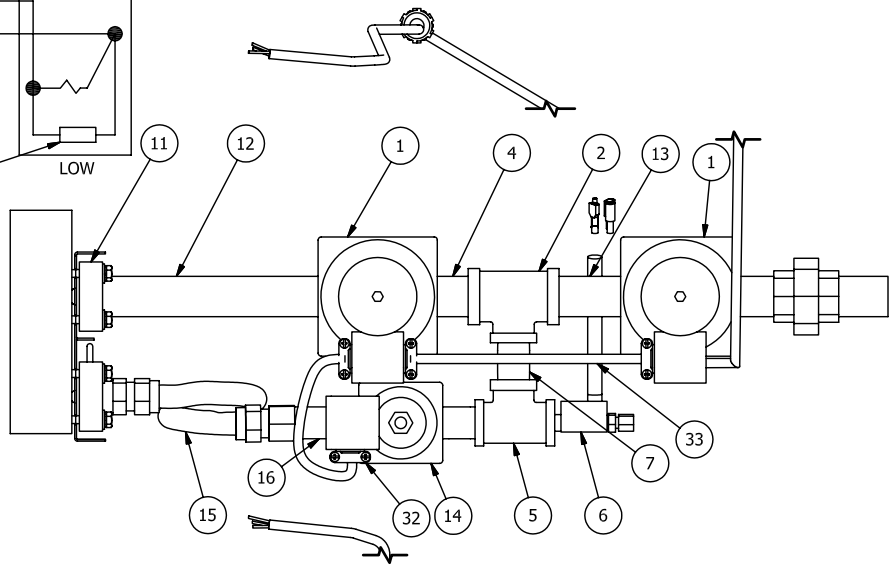

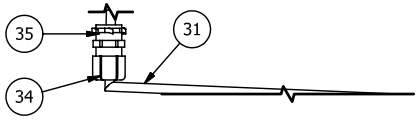

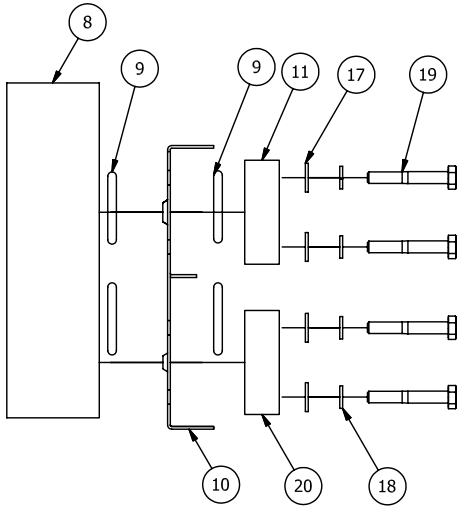

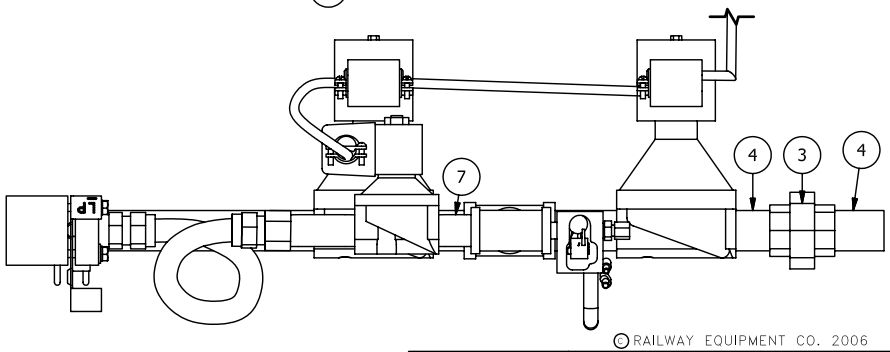

NOTE:

1. USE LOCTITE 401 SEALANT TO INSTALL THE FOUR O-RINGS INTO THE OUTLET MANIFOLD AND THE COUPLING PLATES. DO NOT USE LOCKTITE BETWEEN THE ORINGS AND THE ORIFICE PLATE.
2. WATCH THE GAS FLOW DIRECTION WHEN INSTALLING THE GAS VALVES.

UNLESS OTHERWISE SPECIFIED: DIMENSIONS ARE IN INCHES
TOLERANCES
DECIMALS .X ± 0.1 .XX ± 0.02 .XXX ± 0.01
ANGULAR ± 1°
FRACTIONS ± 1/32
DO NOT SCALE DRAWING

RAILWAY EQUIPMENT CO.
DELANO, MINNESOTA (763) 972-2200

TITLE: ASSY, GHAB PIPING 5HP BUNGALOW

ASSY/BOM

DRAWN: RMJ
DATE: 11/17/06
MAT'L: N/A
BEND ALLOWANCE: N/A
DWG NO: 9638-0138
REV: B
SCALE: 1/4
DWG SIZE: B
SHEET 1 OF 1

ITEM NO.	PART NO.	UOM	QTY	DESCRIPTION
1	952140	EA	1	BURNER, 12 INCH WELDED
2	53070	EA	1	FLAME ROD, REF AUBURN #FRS-4-7½
3	56071	EA	1	SPARK IGNITOR, REF AUBURN #I-31-I
4	2831851112	EA	4	BOLT, 3/8-16 X 3/4
5	2832-8904	EA	4	NUT, 3/8-16 CENTER LOCK
6	952103	EA	1	SUPPORT BRACKET 12 INCH BURNER
7	681402	FT	3.5	WIRE, 14GA HIGH TEMP
8	6033-0100	EA	1	LUG, RING #10 16-14GA HI-TEMP
9	6032-0112	EA	1	LUG, RING 1/4 16-14GA NYLON
10	2831411408	EA	1	SCREW, #10-32 X 1/2 PAN SLT SS
11	2832-4201	EA	1	NUT, #10-32 HEX SS
12	2833-4310	EA	2	WASHER, #10 EXT. STAR
13	61028	EA	1	UNION, 1 IN SCH 40 BLACK
14	61026	EA	1	NIPPLE, 1 X 4 IN SCH 40 BLACK

SYM.	E.C.O.	BY	REVISION DESCRIPTION	DATE	APPROVED
B	02-0004	RF	NEW BURNER	07/20/04	---
–	–	RJ	ADDED WIRE, NIPPLE & UNION	07/20/04	---

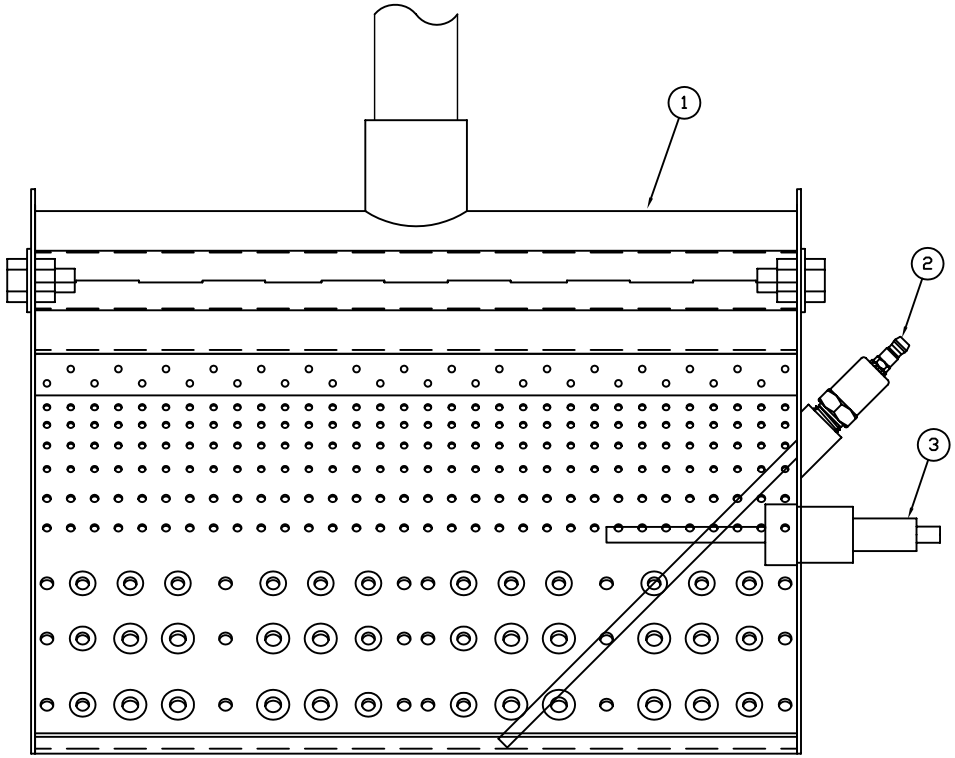

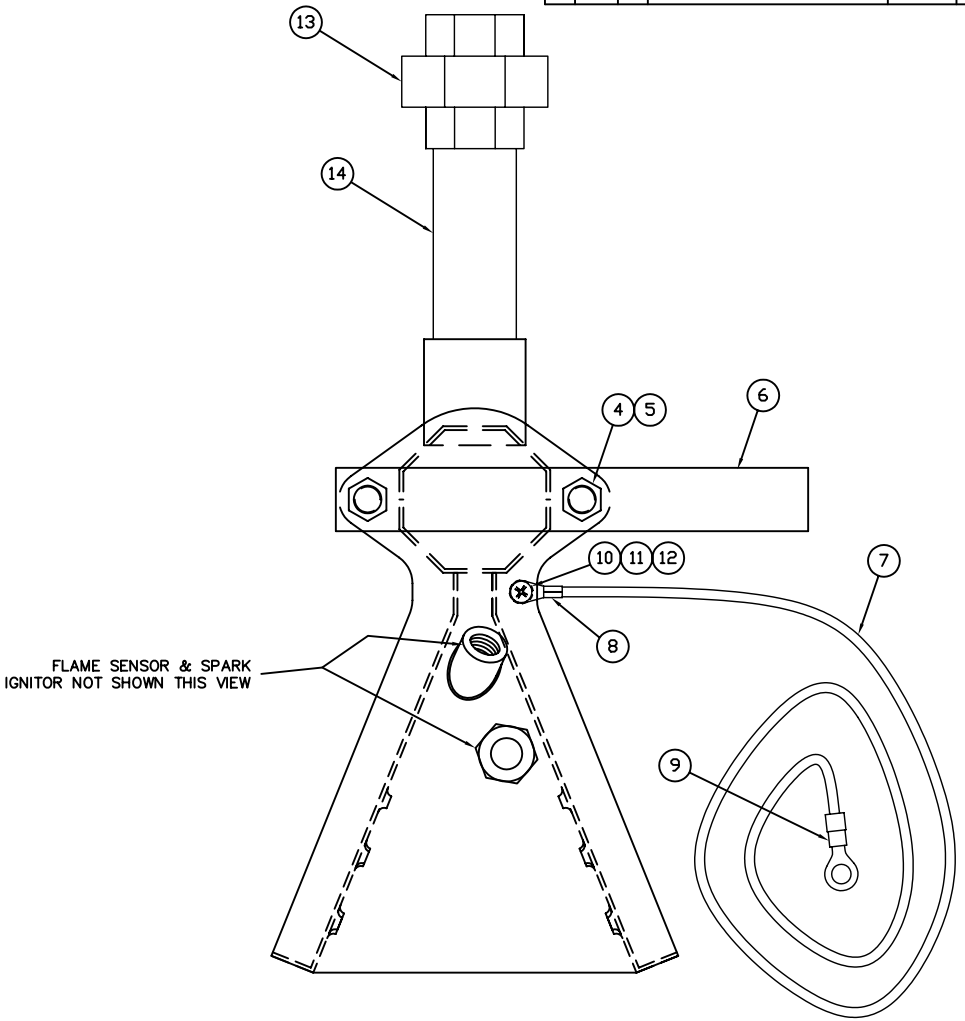

UNLESS OTHERWISE SPECIFIED:
DIMENSIONS ARE IN INCHES
TOLERANCES
DECIMALS .X ± .035 .XX ± .010 .XXX ± .005
ANGULAR ± 0.5°
FRACTIONS ± 1/32
DO NOT SCALE DRAWING

DRAWN RPF

DATE 12/23/03

MATERIAL N/A

BE & BEND ALLOWANCE N/A

RAILWAY EQUIPMENT CO.
DELANO, MINNESOTA (763) 972-2200

TITLE
BURNER
12 INCH STAINLESS
(ASSEMBLY / B.O.M.)

DWG NO. 9528-0135

REV B

SCALE 1/2 DRAWING SIZE B SHEET 1 OF 1

GHAB MENU

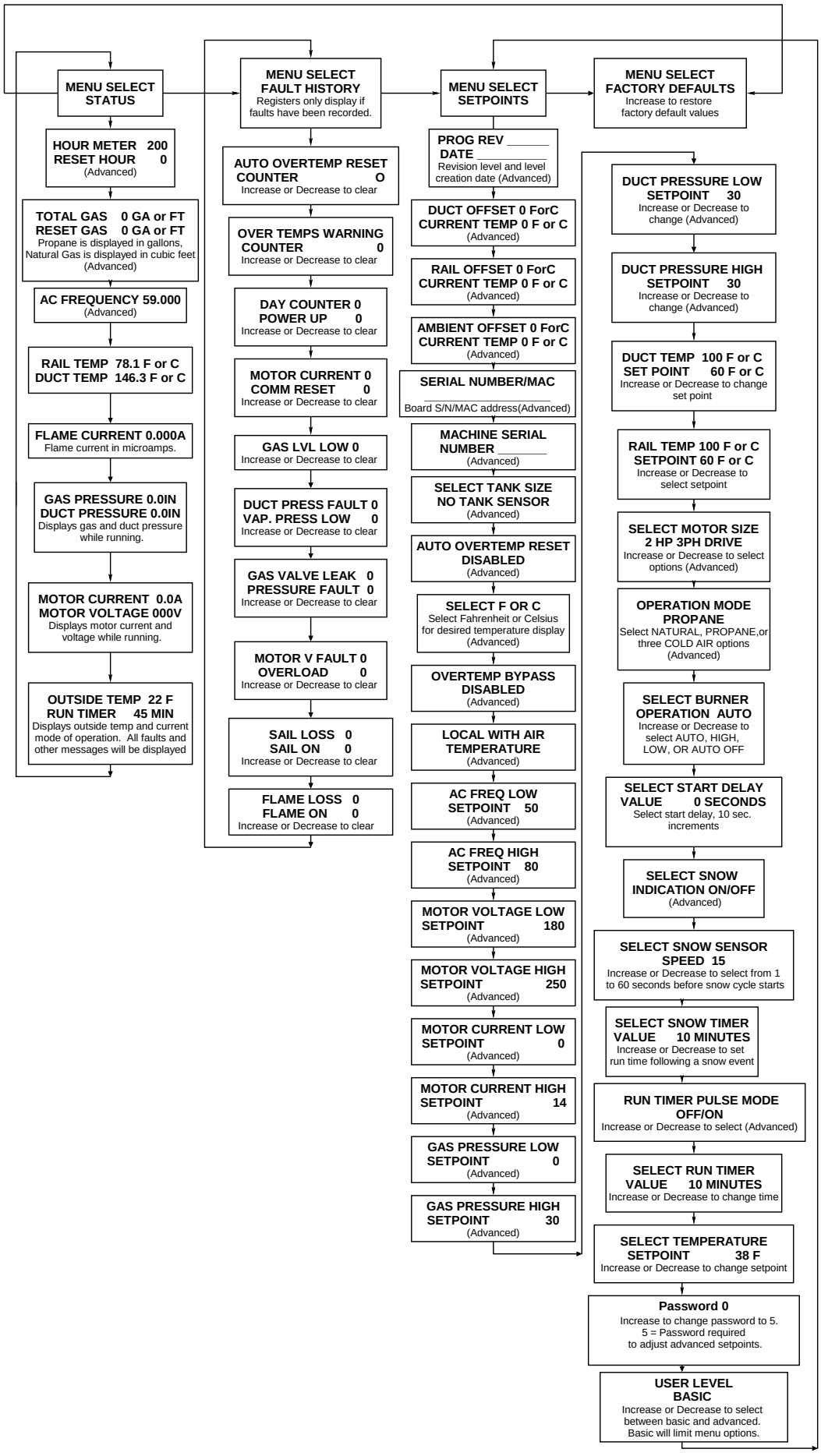
MENU SELECT STATUS
HOUR METER 200
RESET HOUR 0
(Advanced)
TOTAL GAS 0 GA or FT
RESET GAS 0 GA or FT
Propane is displayed in gallons, Natural Gas is displayed in cubic feet (Advanced)
AC FREQUENCY 59.000
(Advanced)
RAIL TEMP 78.1 F or C
DUCT TEMP 146.3 F or C
FLAME CURRENT 0.000A
Flame current in microamps.
GAS PRESSURE 0.0IN
DUCT PRESSURE 0.0IN
Displays gas and duct pressure while running.
MOTOR CURRENT 0.0A
MOTOR VOLTAGE 000V
Displays motor current and voltage while running.
OUTSIDE TEMP 22 F
RUN TIMER 45 MIN
Displays outside temp and current mode of operation. All faults and other messages will be displayed
MENU SELECT FAULT HISTORY
Registers only display if faults have been recorded.
AUTO OVERTEMP RESET COUNTER O
Increase or Decrease to clear
OVER TEMPS WARNING COUNTER 0
Increase or Decrease to clear
DAY COUNTER 0
POWER UP 0
Increase or Decrease to clear
MOTOR CURRENT 0
COMM RESET 0
Increase or Decrease to clear
GAS LVL LOW 0
Increase or Decrease to clear
DUCT PRESS FAULT 0
VAP. PRESS LOW 0
Increase or Decrease to clear
GAS VALVE LEAK 0
PRESSURE FAULT 0
Increase or Decrease to clear
MOTOR V FAULT 0
OVERLOAD 0
Increase or Decrease to clear
SAIL LOSS 0
SAIL ON 0
Increase or Decrease to clear
FLAME LOSS 0
FLAME ON 0
Increase or Decrease to clear
MENU SELECT SETPOINTS
PROG REV _____
DATE _____
Revision level and level creation date (Advanced)
DUCT OFFSET 0 ForC
CURRENT TEMP 0 F or C
(Advanced)
RAIL OFFSET 0 ForC
CURRENT TEMP 0 F or C
(Advanced)
AMBIENT OFFSET 0 ForC
CURRENT TEMP 0 F or C
(Advanced)
SERIAL NUMBER/MAC
_____
Board S/N/MAC address(Advanced)
MACHINE SERIAL NUMBER _____
(Advanced)
SELECT TANK SIZE
NO TANK SENSOR
(Advanced)
AUTO OVERTEMP RESET DISABLED
(Advanced)
SELECT F OR C
Select Fahrenheit or Celsius for desired temperature display
(Advanced)
OVERTEMP BYPASS DISABLED
(Advanced)
LOCAL WITH AIR TEMPERATURE
(Advanced)
AC FREQ LOW SETPOINT 50
(Advanced)
AC FREQ HIGH SETPOINT 80
(Advanced)
MOTOR VOLTAGE LOW SETPOINT 180
(Advanced)
MOTOR VOLTAGE HIGH SETPOINT 250
(Advanced)
MOTOR CURRENT LOW SETPOINT 0
(Advanced)
MOTOR CURRENT HIGH SETPOINT 14
(Advanced)
GAS PRESSURE LOW SETPOINT 0
(Advanced)
GAS PRESSURE HIGH SETPOINT 30
(Advanced)
MENU SELECT FACTORY DEFAULTS
Increase to restore factory default values
DUCT PRESSURE LOW SETPOINT 30
Increase or Decrease to change (Advanced)
DUCT PRESSURE HIGH SETPOINT 30
Increase or Decrease to change (Advanced)
DUCT TEMP 100 F or C
SET POINT 60 F or C
Increase or Decrease to change set point
RAIL TEMP 100 F or C
SETPOINT 60 F or C
Increase or Decrease to select setpoint
SELECT MOTOR SIZE
2 HP 3PH DRIVE
Increase or Decrease to select options (Advanced)
OPERATION MODE
PROPANE
Select NATURAL, PROPANE,or three COLD AIR options
(Advanced)
SELECT BURNER OPERATION AUTO
Increase or Decrease to select AUTO, HIGH, LOW, OR AUTO OFF
SELECT START DELAY VALUE 0 SECONDS
Select start delay, 10 sec. increments
SELECT SNOW INDICATION ON/OFF
(Advanced)
SELECT SNOW SENSOR SPEED 15
Increase or Decrease to select from 1 to 60 seconds before snow cycle starts
SELECT SNOW TIMER VALUE 10 MINUTES
Increase or Decrease to set run time following a snow event
RUN TIMER PULSE MODE OFF/ON
Increase or Decrease to select (Advanced)
SELECT RUN TIMER VALUE 10 MINUTES
Increase or Decrease to change time
SELECT TEMPERATURE SETPOINT 38 F
Increase or Decrease to change setpoint
Password 0
Increase to change password to 5.
5 = Password required to adjust advanced setpoints.
USER LEVEL
BASIC
Increase or Decrease to select between basic and advanced.
Basic will limit menu options.

OPERATING MANUAL

MODEL NO. 965 BUNGALOW

GAS FIRED HOT AIR BLOWER

TRACK SWITCH SNOW MELTER

WITH STEEL TIE DUCT

MANUFACTURED

BY

RAILWAY EQUIPMENT COMPANY
525 NINTH STREET SOUTH
DELANO, MINNESOTA 55328
TEL. 763-972-2200
FAX. 763-972-2900
E-Mail:
Support: Techsupport@rwy.com
Sales: Order@rwy.com

CAUTION

GENERAL HAZARD WARNING

FAILURE TO COMPLY WITH THE PRECAUTIONS AND INSTRUCTIONS PROVIDED WITH THIS HEATER, CAN RESULT IN DEATH, SERIOUS INJURY AND PROPERTY LOSS OR DAMAGE FROM HAZARDS OF FIRE, EXPLOSION, BURN, ASPHYXIATION, CARBON MONOXIDE POISONING, AND/OR ELECTRICAL SHOCK.

ONLY PERSONS WHO CAN UNDERSTAND AND FOLLOW THESE INSTRUCTIONS SHOULD USE OR SERVICE THIS HEATER.

IF YOU NEED ASSISTANCE OR HEATER INFORMATION, SUCH AS INSTRUCTION MANUALS, LABELS, ETC., CONTACT THE MANUFACTURER.

CAUTION

WARNING: FIRE, BURN, INHALATION, AND EXPLOSION HAZARD.

KEEP SOLID COMBUSTIBLES, SUCH AS BUILDING MATERIALS, PAPER OR CARDBOARD, A SAFE DISTANCE AWAY FROM THE HEATER AS RECOMMENDED BY THE INSTRUCTIONS. NEVER USE THE HEATER IN SPACES WHICH DO OR MAY CONTAIN VOLATILE OR AIRBORNE COMBUSTIBLES, OR PRODUCTS SUCH AS GASOLINE, SOLVENTS, PAINT THINNER, DUST PARTICLES OR UNKNOWN CHEMICALS.

CAUTION

NOT FOR HOME OR RECREATIONAL VEHICLE USE
The heater is designed and approved for use as a construction heater under ANSI Z83.7

We cannot anticipate every use which may be made of our heaters.
CHECK WITH LOCAL FIRE SAFETY AUTHORITY IF YOU HAVE QUESTIONS ABOUT APPLICATIONS.

Other standards govern the use of fuel gases and heat producing products in specific applications. Your local authority can advise you about these.

PLEASE READ THIS INSTRUCTION MANUAL ENTIRELY BEFORE HANDLING THIS MATERIAL OR ATTEMPTING TO INSTALL, OPERATE OR SERVICE THIS HOT AIR BLOWER SYSTEM.

PLEASE READ THE WARNINGS AND CAUTIONS LISTED BELOW.

CAUTION

SHEET METAL EDGES MAY BE VERY SHARP AND CAN CAUSE SEVERE CUTS OR LACERATIONS. PROTECTIVE GLOVES AND CLOTHING SHOULD BE WORN. USE CAUTION WHEN HANDLING ALL SHEET METAL COMPONENTS.

CAUTION

THIS HOT AIR BLOWER TRACK SWITCH SNOWMELTER SYSTEM CAN BE OPERATED REMOTELY OR BY A SNOW DETECTOR SYSTEM. THEREFORE, OPERATION MAY BEGIN UNEXPECTEDLY. USE CAUTION WHEN IN THE AREA.

CAUTION

SYSTEM OPERATES WITH VARIOUS VOLTAGE LEVELS UP TO 600VAC. CONTACT WITH ELECTRICITY CAN BE HAZARDOUS OR LETHAL. MAKE SURE THAT THE MAIN CIRCUIT BREAKER IS TURNED OFF BEFORE ATTEMPTING TO SERVICE THIS SYSTEM. EVEN WITH CIRCUIT BREAKER OFF LINE VOLTAGE IS PRESENT AT THE TOP CIRCUIT BREAKER CONNECTIONS.

CAUTION

THIS SYSTEM CONTAINS A HIGH SPEED AIR FAN WHICH ROTATES AT UP TO 3600RPM AND CREATES FORCEFUL SUCTION WHEN OPERATING. DO NOT OPERATE THE BLOWER SYSTEM IF ANY OF THE DUCTWORK COMPONENTS HAVE BEEN REMOVED.

CAUTION

THIS SYSTEM OPERATES WITH NATURAL GAS OR PROPANE. BOTH ARE GASES WHICH ARE FLAMMABLE AND EXPLOSIVE. USE EXTREME CAUTION WHEN WORKING IN THE AREA. AVOID ANY OPEN FLAME, SPARKS OR OTHER SOURCE OF IGNITION.

CAUTION

THE OUTLET AIR TEMPERATURE FROM THIS GAS SNOW MELTER SYSTEM SHOULD NOT EXCEED 375°F FROM ANY NOZZLE OR DUCT. **DO NOT OPERATE THIS BLOWER SYSTEM IF THE OUTLET TEMPERATURE EXCEEDS 375°F.** AN ACCURATE THERMOMETER SHOULD BE USED TO REGULARLY CHECK THE OUTLET AIR TEMPERATURE. IF THE OUTLET TEMPERATURE EXCEEDS 375°F, CHECK TO MAKE SURE THAT THE FLOW OF AIR IS NOT RESTRICTED AT ANY POINT, THAT THE BLOWER/MOTOR ARE OPERATING PROPERLY, THAT THE CORRECT ORIFICE IS USED FOR THE TYPE OF FUEL USED, AND THAT THE REGULATOR(S) ARE PROPERLY ADJUSTED FOR THE FUEL BEING USED. CONSULT RAILWAY EQUIPMENT COMPANY IF YOU ARE UNABLE TO OPERATE THIS GAS SNOW MELTER SYSTEM BELOW 375°F.

A HIGH TEMPERATURE LIMIT SYSTEM HAS BEEN INCORPORATED INTO ALL RAILWAY EQUIPMENT COMPANY GAS SNOW MELTER SYSTEMS BEGINNING IN 1999. RAILWAY EQUIPMENT COMPANY ALSO HAS A HIGH TEMPERATURE LIMIT MODIFICATION KIT THAT CAN BE ADDED TO GAS SNOW MELTER SYSTEMS MANUFACTURED PRIOR TO 1999. IT IS RECOMMENDED THAT THIS HIGH TEMPERATURE LIMIT SYSTEM BE INSTALLED AND USED. CONSULT RAILWAY EQUIPMENT TO ORDER THE HIGH TEMPERATURE MODIFICATION KIT, OR IF YOU NEED ASSISTANCE REGARDING THE HIGH TEMPERATURE LIMIT SYSTEM.

THIS SNOW MELTER SYSTEM HAS BEEN DESIGNED TO PROVIDE DEPENDABLE EFFECTIVE OPERATION IN ALL WEATHER CONDITIONS WITHOUT SWITCH COVERS. SWITCH COVERS MAY CAUSE HIGHER AIR TEMPERATURES. IF SWITCH COVERS ARE USED, YOU MUST DETERMINE A SAFE OPERATING AIR TEMPERATURE AND ADJUST BURNER PARAMETERS ACCORDINGLY. ADJUSTMENT OF BURNER PARAMETERS MAY NEGATIVELY AFFECT BURNER PERFORMANCE AND COMBUSTION CHARACTERISTICS TO THE EXTENT THAT THE BURNER MAY BE UNABLE TO MAINTAIN COMBUSTION. CONSULT RAILWAY EQUIPMENT COMPANY REGARDING BURNER OPERATING PARAMETERS.

TWO (2) COMPLETE INSTRUCTION MANUALS HAVE BEEN INCLUDED WITH THIS SNOW MELTER SYSTEM. PLEASE KEEP ONE OF THE MANUALS WITH THE SYSTEM AFTER INSTALLATION. ANYONE OPERATING OR SERVICING THIS SNOW MELTER SYSTEM SHOULD READ THE MANUAL ENTIRELY BEFORE PROCEEDING.

IF YOU HAVE ANY QUESTIONS CONCERNING THE MANUFACTURE, DESIGN, FUNCTION, INSTALLATION, OPERATION OR MAINTENANCE, CONTACT RAILWAY EQUIPMENT COMPANY BEFORE PROCEEDING.

TABLE OF CONTENTS

I. GENERAL INFORMATION

A. MODEL NUMBER DESCRIPTION

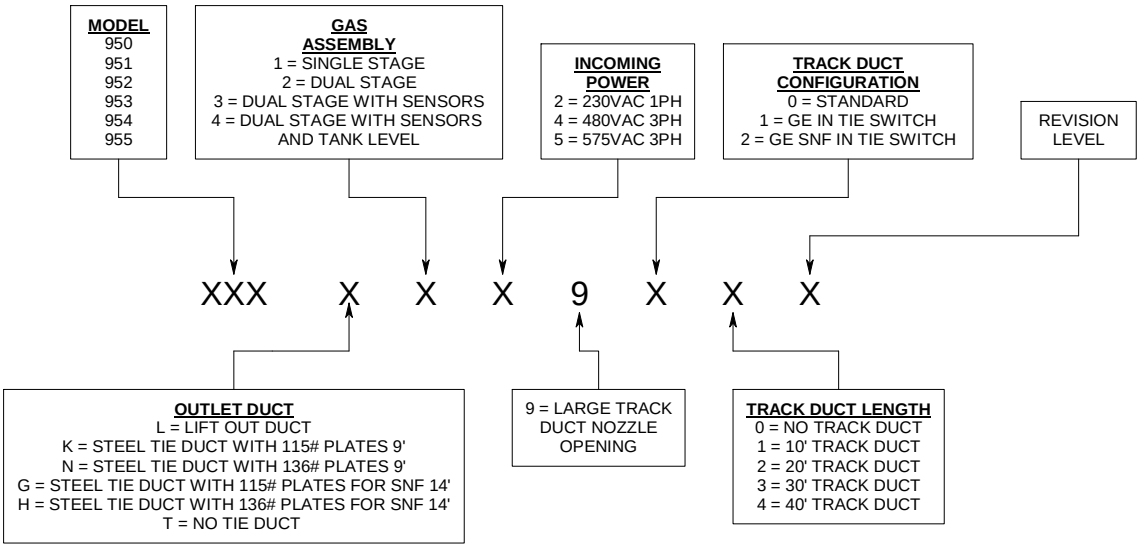

B. STANDARD FEATURES OF 950/951 SERIES TRACK SWITCH HOT AIR BLOWER

1. GHAB complies with AREMA 12.6.10.
2. Gas fired operation, allows for both propane and natural gas (convertible in the field)
3. Two stage operation (400,000 / 200,000 BTU) that allows savings on fuel costs.
4. 2 H.P. direct drive motor, totally enclosed fan cooled, 230VAC 60Hz, single phase.
5. High efficiency, quiet operation , 2000 CFM blower.
6. Remote operation via contact closure (low voltage, low current) with timed shut off.
7. Built-in snow detector system (requires Snow Detector assembly option).
8. Auto-Off-Force switch.
9. High temperature limit thermostat/shut off.
10. Adjustable air temperature control.
11. Adjustable rail temperature control.
12. Reply indication via GHAB contact closure.
13. Fail indication via GHAB contact closure.
14. Main circuit breaker.
15. Audible tone before blower startup
16. Weathertight gasketed control enclosure

17. Status indicating lights for all control functions
18. Start delay timer for sequential startup
19. Run timer for timed operation
20. Selectable "Transparent" snow detector operation
21. Snow detect timer
22. All ductwork and nozzles are thermally and electrically isolated from tracks
23. Quick-release track duct
24. Blower motor starter with overload protection
25. Remote auxiliary gas valve (115vac) supplied connection
26. Gas line accessories:
    - A. Manual gas valve
    - B. Gas line strainer
    - C. Low pressure regulator
    - D. Flexible gas line connection pipe
27. Elevated air intake
28. Adjustable delay for start up (10 Sec. -5 Min.)
29. Complete flame safeguard control:
    - A. Pre-ignition air purge.
    - B. Air flow proving switch
    - C. Direct spark ignition
    - D. Flame proving sensor
    - E. Post shut off air purge 4 Min.
    - F. Automatic shut off on loss of flame or air flow
    - G. Leaky gas valve
    - H. Automatic retry on flame loss
    - I. Automatic reset on flame safeguard control
    - J. All flame safeguard controls CSA listed.
30. All components mounted and wired within main unit – no external wiring required except for remote control, indications and optional snow detectors.
31. Galvanized case constructed of 14-gauge steel, high temperature baked enamel finish.
32. Convenient panel access to high efficiency burner, flame sensor and spark igniter.
33. Galvanized steel adjustable mounting foundations.
34. Standard ductwork: 1.5’ flame duct with 2.5’ straight insulated flexible duct and heavy duty insulated offset duct connects to main tie duct electrically insulated between rails, 24 inch (minimum) switch point nozzles.

The following items are recommended for use with propane gas service:

Tank "pigtail" with POL/POL fittings (P/N 45038-12” or 60127-36”)
High pressure regulator (P/N 45103)
Gas line strainer (P/N 45040)
Remote solenoid valve (P/N 45036) OR
Complete Propane Package (P/N 9458-0100)

II. COMPONENT DESCRIPTION

A. MAIN HOT AIR BLOWER (HAB) UNIT

1. **MAIN CIRCUIT BREAKER:** Provides main over-current protection and manual on-off control of electrical power.

2. **MOTOR CONTACTOR:** Provides automatic blower motor control, with high current contacts.

3. **MOTOR OVERLOAD RELAY:** Protects the blower motor from an over-current condition.

4. **CONTROL MODULE:** Provides complete control of operation. See separate description and details, section IV.

5. **CONTROL TRANSFORMER**: Provides control power for the control module and other control components. The multi-tapped secondary provides, 36VAC CT and 17VAC CT. The primary has 115VAC input plus a 230VAC step-up winding and 12.6 VAC CT windings.

6. **IGNITION TRANSFORMER:** Provides 10000VAC to the spark igniter during the ignition sequence.

7. **AIRFLOW SWITCH:** Located in the flame duct, the sail switch indicates proper airflow before and during burner operation. The differential setting is determined by elevation.

8. **BURNER:** Contains the actual flame. Also holds the spark igniter and the flame-sensing rod.

9. **PROPANE/NATURAL GAS ORIFICE PLATE:** Controls the rate of flow of gas to the burner.

10. **SPARK IGNITER:** The spark plug type igniter provides spark for the burner. The spark igniter is momentary - sparks only until the flame has been established.

11. **FLAME DETECTION ROD:** The flame detection rod monitors the flame at the burner nozzle using the rectification principle. This provides a low-level signal to the control module if a proper flame exists.

12. **AIR TEMPERATURE SENSOR:** This is an analog type sensing circuit to monitor the ambient air temperature.

13. **RAIL TEMPERATURE SENSOR:** This is an analog type sensing circuit to monitor the actual rail temperature.

14. **GAS VALVE:** This is an electric solenoid valve which controls the flow of gas for burner operation. It is controlled directly from the control module.

15. **BLOWER MOTOR:** The 3HP 3450RPM motor is totally enclosed and fan cooled.

16. **BLOWER:** The high efficiency blower wheel provides up to 3600CFM airflow. It is dynamically balanced for smooth and quiet operation.

17. **BUZZER:** The buzzer will sound a 10-second tone immediately before the motor contactor is energized.

B. STANDARD DUCTWORK

1. **HEAT DUCT:** The first section of ductwork attached to the main HAB unit. This duct contains the burner, air flow switch, spark igniter and the duct pressure sensor.

2. **FLEX DUCT:** Connects the heat duct to the offset duct. It is a section of flexible duct, 24” long, enclosed in an insulated sheet metal wrapper.

3. **HEAVY DUTY OFFSET DUCT:** Connects the flex duct to the tie outlet duct. This duct provides an 8” offset and encloses the air mixer.

4. **TIE OUTLET DUCT:** The outlet duct extends under the rails in place of a tie and directs the airflow to the point nozzles and track ducts. The rail attaches to the duct using tie plates and E clips. The tie plates are electrically insulated from the rail using an insulating kit. There are six openings in the top for point nozzles and track duct nozzles. Refer to drawing 9528-4805 and 963N32902 for the duct layout.

5. **TRACK DUCTS:** These ducts rest on brackets on the ties and the outlet duct. They are installed over the track duct nozzles. The track ducts consist of a 5’ point, a 5’ mid, and 10’ sections to complete the desired length.

6. **TRACK DUCT NOZZLE:** Attaches to the inner two rectangular openings on the top of the outlet duct. Directs airflow down the length of the switch through the track ducts.

7. **TRACK DUCT NOZZLE ISOLATING KIT:** This is an electrically insulating gasket with insulating washers and hardware to provide isolation between the nozzles and the outlet duct. Refer to drawing 9278-0027 for proper installation.

8. **QUICK CHANGE NOZZLE PLATE:** This plate allows for quick removal or installation of nozzles to the tie duct, by simply loosening of four bolts the nozzle assembly can be removed or installed.

9. **TRACK DUCT SUPPORT BRACKET:** These brackets are used to secure the track duct in position. Refer to drawing 92774.

10. **SWITCH POINT NOZZLE:** These nozzles direct heated air down the switch point. They are mounted on the outlet duct. They can be adjusted for proper airflow direction. Nozzles may be shortened by up to 10" for proper fit.

11. **POINT NOZZLE ISOLATING KIT:** This is an electrically insulating gasket with insulating washers and hardware to provide isolation between the nozzles and the outlet duct. Refer to drawing 9278-0021 for proper installation.

C. OPTIONAL DUCTWORK

1. **EXTENSION DUCTS:** Extension ducts of various lengths are available to meet specific requirements. These are insulated and enclosed in a metal wrapper. Make sure the duct is mounted in the correct orientation, as there is an access opening underneath the insulating wrapper cover. If additional duct extensions are required, this assembly can be added between the outlet duct and the offset duct.

2. **7' TRACK DUCT:** These track ducts are seven feet long. They are often mounted outside of the track near the switch machine. A kit is available (P/N 9278-0270) that includes a 7' track duct, a track duct nozzle and a track duct isolation kit.

OTHER DUCTWORK ASSEMBLIES ARE AVAILABLE. CONSULT THE FACTORY FOR SPECIAL DUCTWORK NEEDS.

(INTENTIONALLY LEFT BLANK)

III. INSTALLATION

INSTALLATION SHOULD BE DONE IN THIS ORDER:

A. TIE DUCT OUTLET DUCT/OFFSET DUCT
B. MAIN HAB UNIT/FLEX DUCT
C. POINT NOZZLES AND TRACK DUCTS
D. GAS
E. CHANGING THE GAS ORIFICE
F. ELECTRICAL

PLEASE READ THROUGH THE ENTIRE INSTRUCTIONS BEFORE BEGINNING INSTALLATION.

A. TIE DUCT

1. Remove the appropriate tie. Choose the tie that will result in the point nozzles being as close to the switch point as possible without interfering with normal switch operation. The distance from the center of the tie duct to the end of the point nozzles is 33”. If necessary, up to 10” may be cut off each point nozzle.

2. Remove sufficient ballast to provide at least 14” clearance from the bottom of the rails.

3. Carefully slip the tie duct under the rails and position it so that the rails are directly above the tie plates. Ensure that the tie duct is centered between the adjacent ties.

4. Place a rubber pad on the tie plate, then using a suitable lever, raise one end of the tie duct until the rail lies correctly on the pad on the tie plate. Place two e-clip insulators, one on each side of rail, in place and then fasten the rail to the tie plate using two of the four 927248 rail clips. Use a heavy hammer or maul to drive the clips securely into place.

5. While keeping the tie duct supported in place, firmly pack ballast under the tie duct from the rail out to the end.

6. Repeat steps 4 and 5 for the other end of the tie duct.

7. a. Remove the end flange plate nearest the HAB by loosening the six retainer bolts.
   b. Install the two-foot heavy duty offset duct (P/N 9278-3403) to the tie duct using hardware and gasket supplied with the offset duct.

8. Firmly repack ballast under the entire tie duct.

B. BUNGALOW PLACEMENT

1. Attach the 2' offset duct (P/N 9528-3103) to the flame duct using the bolt and gasket kit from the flame duct.

2. Attach the 2-1/2' flex duct (P/N 9528-4220) to the offset duct on the flame duct, using the bolt kit from the offset duct.

3. Position the bungalow to line up with the 2' heavy duty offset duct and the 2' flex duct (Refer to Drawing #963N32902).

4. Connect the heavy duty offset duct to the flex duct using the bolts and gasket provided with the flex duct and level the bungalow.

5. Adjustable Air Intake. To start the GHAB in a new location, set the intake screen in the closed position. If there proves to be a moisture problem where frost builds up on the intake screen, the screen can be set in the open position to improve the air intake to the GHAB.

6. The airflow switch differential setting is factory set on "D" which is for elevations below 2000 ft. If your location is set at a higher elevation, this differential setting will need to be adjusted. Adjust per the following instructions:

   a) Remove the galvanized cover over the airflow switch.
   b) Remove the cover from the airflow switch.
   c) Adjust the differential wheel on the base of the airflow switch as follows:

      Below 2000 ft elevation, set Airflow Differential Wheel to "D"
      Below 4000 ft elevation, set Airflow Differential Wheel to "C"
      Below 6000 ft elevation, set Airflow Differential Wheel to "B"
      Above 6000 ft elevation, set Airflow Differential Wheel to "A"

C. POINT NOZZLES AND TRACK DUCTS

REFER TO DRAWING 963N32902 FOR TRACK DUCT AND POINT NOZZLE POSITIONS.

1. Attach switch point nozzles to the openings in the outlet duct. Position nozzles for proper airflow direction. Instructions are included in the isolation kit (P/N 9278-0021) used with the point nozzles.

2. Attach track duct nozzles to the outlet duct, observing airflow direction. Refer to instructions included with the isolation kit (P/N 9278-0027).

3. Assemble the individual track duct sections into two complete track duct sections. The mid and heel sections contain splices wrapped around the outside of the duct. Unhook the clips to remove the three cover pieces. The bottom can now be removed from the duct.

To assemble the splice:

a. Center the bottom splice piece on the seam between the two track ducts.
b. Connect the center cover piece over the seam. (NOTE: The center cover piece has slots to contain the bolts on the track duct).
c. Finally connect the two end cover pieces.

4. Lay the track ducts on the rail ties alongside where they will be installed.

5. Refer to the drawing 92774. Place the track duct support brackets in position on the ties so that one is near the heel end and one near each joint. Use the lag bolts to fasten the brackets in place. Lay the track duct on the bracket bases. Place the hold-down straps over the track ducts. Attach the hold-down strap to the track duct support brackets by inserting the spring clip into the strap.

6. Push in the square knockouts in the track ducts where airflow is desired. The knockout should be pushed in and bent completely so that no portion of the knockout obstructs the airflow in the duct. Knockout tabs that are not bent back completely will obstruct the airflow as it moves through the track duct resulting in reduced air pressure and airflow further along the track duct.

7. Inspect the track duct nozzles for proper operation. The damper plate should rotate without binding. Ensure that the damper plate is in the proper position, then tighten the locking nut. Ensure that the damper plate is locked firmly in place.

D. GAS CONNECTION

CAUTION

When tightening gas line fittings or components to the HAB unit be sure that you do not rotate the pipe that enters the blower unit. This could cause the gas control valve inside the blower unit to rotate also. Please reference the label attached just above the pipe that enters the blower unit.

1. The following items are available as optional items
   * High pressure regulator (P/N 45103)
   * 36" Gas tank "pigtail" (P/N 60127)
   * 12" Gas tank "pigtail" (P/N 45038)
   * Remote gas valve (P/N 45036)

   NOTE: A propane package is available (P/N 9458-0100) that includes a 36" tank pigtail, high pressure regulator, gas line strainer, gauge, remote solenoid valve in a pole mount enclosure, and a 4X4X8' post.

FOR NATURAL GAS INSTALLATION PROCEED TO STEP 5

2. *Install the copper "pigtail" to the propane tank. Each end of the pigtail is a reverse thread.
3. *Install the high pressure (red) regulator to the pigtail. Remember reverse thread on the pigtail connection.
4. Install the "Y" strainer downstream (but near) the high pressure regulator, or natural gas source.
5. *Install the remote gas valve downstream (but near) the "Y" strainer. Electrical connections from the remote gas valve are made to terminal posts TS1-10 (115vac) and NEUTRAL on the HAB unit. The valve must be mounted with the inlet and outlet horizontal, and the coil upwards.
6. Install adequate size gas pipe from the remote tank location to the main HAB unit. Check with local gas supplier for sizing recommendations.
7. The remaining gas line components are attached to the HAB unit, as shown on drawing R9500-0027. Remember to position the regulator vent fitting facing sideways so that moisture will not enter the regulator.
8. If you are having problems adjusting the gas pressure low enough, the spring in the low pressure regulator must be changed. To change the spring, complete the following steps:

   a. Try adjusting the low pressure regulator for proper fuel pressure. If it can't be adjusted, follow instructions listed below for changing the regulator spring.

   b. Turn power off and close manual gas valve.

c. Remove the plug on top of the regulator.

d. Turn the white plug inside the regulator counter-clockwise until it can be removed.

e. Replace the violet spring with the red spring provided in the gas accessory kit.

f. Replace the top plug.

g. Go to gas pressure menu to adjust.

h. Turn the manual gas valve to “ON” position and turn power on.

i. Place the AUTO/OFF/FORCE switch (SW1) in the “FORCE” position.

j. Place the burner control select in the hi-only position.

k. After the 30-second pre-purge period, the unit will ignite. Check the gas pressure display. Adjust the white plug in regulator until the display reads 11” water column for propane or 7” water column for natural gas. NOTE: Clockwise to increase pressure, counter-clockwise to decrease pressure.

l. Let the GHAB run for a 10 minute period.

m. After the 10 minute period, take temperature readings at both point nozzles.

n. Determine the ambient temperature at the location and subtract the ambient temperature from the point nozzle reading. This temperature should not exceed 250˚F for optimum efficiency.

o. If the temperature is above 250˚F, adjust the gas pressure at the low pressure regulator down (1” w.c. at a time) until you reach the desired temperature.

p. Replace the top plug.

* OPTIONAL ITEMS AVAILABLE FROM RAILWAY EQUIPMENT CO.

(INTENTIONALLY LEFT BLANK)

E. CHANGING THE GAS ORIFICE

1. This unit uses an orifice plate instead of individual orifices. The orifice plate contains the orifices for both propane and natural gas for both stages of operation.

CAUTION

2. Make sure the main circuit breaker is in the OFF position and the manual gas valve is closed before working on the HAB unit.

3. Remove the bottom intake cover from the HAB unit (Skip this step for bungalow units).

4. On the right hand side of the gas assembly you will see the orifice plate. The orifice plate has a tab facing out that says NG for natural gas or LP for propane. This will tell you how the unit is currently set up.

5. To change from one fuel to the other:
   a. There are four bolts on each gas coupling plate. You need to fully remove the top two bolts on each coupling plate and you need to back out the bottom two bolts on each coupling plate 1/2 to 3/4 of an inch.
   b. On the inlet manifold (left hand side of the gas assembly) you need to remove the two bolts securing the manifold to the outside of the GHAB.
   c. You can now carefully slide the gas assembly to the left to free the orifice plate.
   d. The orifice plate can be pulled away from the outlet manifold and up and out. NOTE: Take care removing the orifice plate so you don't damage the O-rings.
   e. The orifice plate can now be flipped over for the other fuel and re-inserted in between the gas coupling and outlet manifold. NOTE: Take care replacing the orifice plate so you don't damage the O-rings.
   f. Slide the gas assembly back to the right and insert the top bolts on the coupling plates.
   g. Verify the tab facing out on the orifice plate is now the correct fuel.
   h. Evenly tighten the eight bolts on the coupling plates.
   i. Replace the bolts on the inlet manifold bracket (outside of GHAB).
   j. Re-install the lower intake cover.

6. Turn on power and manual gas valve.

7. Test unit and check regulator adjustment and output temp.

F. ELECTRICAL CONNECTION

1. Power conductors should be brought into the large LB box on the side of the bungalow.

CAUTION

THE 230VAC SUPPLY LINES SHOULD BE SIZED TO ALLOW FOR THE AC MOTOR START-UP CURRENT WHICH IS 128 AMPS. UNDERSIZED CONDUCTORS AND OR LONG WIRE RUNS WILL DAMAGE THE MOTOR.

2. **INCOMING POWER:** The incoming power should be connected directly to the lugs in the main breaker box. The neutral should be connected to the neutral bus. The neutral should be grounded at the source.

3. **GROUND:** The breaker box ground should be tied directly to earth ground.

SPECIAL NOTE: THE CONTROL CHASSIS AND THE REST OF THE MAIN HAB UNIT MUST BE CONNECTED TO GROUND/NEUTRAL. THE RUBBER PAD BETWEEN THE RAIL AND TIE PLATE ALONG WITH THE E-CLIP INSULATORS WILL INSULATE THE MAIN UNIT FROM THE TRACKS.

4. **CONTROL INPUT:** Remote operator control can be provided by a circuit closure applied between terminal posts TS1-1 and TS1-2.

5. **INDICATION:** Reply indication can be done two ways:

   a. Dry contact closure: Terminal posts TS1-3 and TS1-4 will provide a dry contact closure for indication when the unit is operating under remote control.

   b. +24 VDC: Place a jumper between terminal posts TS1-2 and TS1-4. +24 VDC indication is now present on post TS1-3 with common at terminal post TS1-6.

6. **FAIL:** Reply fail can be done two ways:

   a. Dry contact closure: Terminal posts TS1-5 and TS1-4 will provide a dry contact closure for fail when the unit is in a fault mode.

   b. +24 VDC: Place a jumper between terminal posts TS1-2 and TS1-4. +24 VDC fail is now present on post TS1-5 with common at terminal post TS1-6.

7. DUCT WORK OVERTEMP SENSOR (P/N 9338-0355):

a. On the tie duct remove the two bolts holding down the overtemp sensor cover nearest the HAB unit. Install the sensor onto the duct work using the two bolts that were removed.

b. Run conduit along duct work back to HAB enclosure; connect connector to enclosure knock out; tighten. (NOTE: Cut conduit to length if needed.)

c. Run wires from sensor into enclosure and plug connector into OVERTEMP (RED) J10 located on the control module.

d. Use five clamps (P/N 60030) to secure conduit to the side of duct work using existing screws.

8. RAIL TEMP SENSOR (P/N 9228-0615)115# rail (P/N 9228-0616)136# rail

a. Attach the sensor to the outside web of the stock rail approximately four feet ahead of the point nozzle. Use spring clips to attach to rail.

b. Run wires from sensor into enclosure and plug connector into RAIL TEMP (YELLOW) J11 located on the control module.

IV. CONTROL MODULE

A. DESCRIPTION

The hot air blower control module contains all of the elements and functions necessary for advanced snow melter operation. The unique dual-chip microcomputer has been programmed with logic and timing sequences to provide complete heater control as well as operational control and system interface. Some of the many features included in the control module are:

- Auto-Off-Local selector switch
- Adjustable air temperature setting
- Built-in snow detector (Requires Optional Snow Detector Head)
- Adjustable start-up delay sequence
- Adjustable run timer for timed or continuous operation
- Adjustable snow detect timer for use with optional snow detector
- Operator control and indication
- Remote fault reset
- Audible tone before blower start-up
- Input/output status indication lights:
  - Inputs:
    - Air temperature
    - Remote Control
    - Moisture Detector One or two snow detector(s) (Optional)
    - Airflow switch
    - Flame Sensor
    - Rail Temp Sensor
    - High Temp Sensor
  - Outputs:
    - Blower motor
    - Ignition spark
    - External Gas Valve
    - Hi Gas valve
    - Low Gas valve
    - Indication
    - Fail
  - Flame safety control:
    - 10 second tone before blower turn on
    - Air flow proving
    - 30 second pre-purge before ignition
    - Direct spark ignition
    - 10 second maximum ignition period before lock-out
    - Rectification type flame rod sensor
    - Automatic retry on flame loss
    - 4 minute post-purge period after gas valve turn-off
    - Automatic reset

Fault if flame does not go out after gas valve is commanded off

B. SET-UP AND ADJUSTMENTS: To change settings and adjust times do the following:

Mode Up Push Button

Pushing the Mode Up push button (PB2) will cycle up through the menus. Each time you press the mode up push button you will advance one menu selection.

Mode Down Push Button

Pushing the Mode Down push button (PB3) will cycle down through the menus. Each time you press the mode down push button you will move down one menu selection.

Increase Values

The Increase Values push button (PB4) allows you to increase the values.
NOTE: Values will be saved.

Decrease Values

The Decrease Values push button (PB5) allows you to decrease the values.
NOTE: Values will be saved.

The following is the layout of the controller menu:

Controller Menu

The controller has 6 menus categories, they are:

1. Status
2. Fault History
3. Set Points
4. Factory Defaults

Menu Selection

To select the desired menu, press the Mode Up or Down button until ********MENU SELECT******* is displayed, on line 1, and then use the Increase or Decrease Value button to select the appropriate menu. Once the appropriate menu is selected, use the Mode Up or Down buttons to view the contents of the menu.

NOTE: Use the Increase or Decrease Values button to change setpoint values.

STATUS MENU

1. **OUTSIDE TEMP AND PRESET VALUE**
   Displays the current ambient temperature and temperature preset value. If ambient temperatures is below the preset value, the unit will start if requested.

2. **MOTOR CURRENT AND MOTOR VOLTAGE**
   Motor current displays the actual motor current in amps while motor is running. Motor voltage displays the actual motor voltage in volts while motor is running.

3. **GAS PRESSURE AND DUCT PRESSURE**
   Gas pressure is the actual differential pressure at the burner. The unit of measure is inches of water ("H2O). To view gas pressure, the burner should be burning. The correct setting should be 11"H2O for propane, be 7"H2O for natural gas. While adjusting, the burner should be in high only. Adjust regulator to change gas pressure value. Duct temperature is the actual duct temperature in degrees F or C.

4. **FLAME CURRENT**
   Flame current displays the actual flame current in micro amps while a flame is present.

5. **RAIL TEMP AND DUCT TEMP**
   Rail temperature is the actual rail temperature in degrees F or C. Duct temperature is the actual duct temperature in degrees F or C.

6. **AC FREQUENCY**
   Displays the frequency of the line voltage.

7. **TOTAL GAS AND RESET GAS**
   Total gas displays the calculated amount of gas that has been used. The unit of measure is gallons if propane is selected. The unit of measure is cubic feet if natural gas is selected. Reset gas is the same as total gas except it can be reset. To reset, press the decrease value button.

8. **HOUR METER AND RESET HOUR**
   Hour meter displays the total hours that GHAB has been running. Reset hour is the same as hour meter except it can be reset. To reset, press the decrease value button.

9. **TANK LEVEL, BAT AND TEMP**
   Tank level displays the actual level of propane tank in percent full (optional tank level monitor must be installed). Bat displays the battery level of the tank monitor. Temp displays the temperature in the battery monitor.

FAULT HISTORY MENU

NOTE: Some faults may not show in Fault History until there is an actual fault. Press the decrease or increase value button to reset fault count.

1. **FLAME LOSS AND FLAME ON**
   Flame loss counter is total count of flame loss faults. Flame on counter is total count of flame on faults.

2. **SAIL LOSS AND SAIL ON**
   Sail loss counter is total count of sail loss faults. Sail on counter is total count of sail on faults.

3. **MOTOR V FAULT AND OVERLOAD**
   Motor volts low or high counter. Overloads counter is total motor overloads faults.

4. **GAS VALVE LEAK AND PRESSURE FAULT**
   Gas valve counter is total count of leaking gas valve faults. Gas pressure low or high counter.

5. **DUCT PRESS FAULT AND VAP. PRESS LOW**
   Duct pressure fault counter is total count of duct pressure faults. Vaporization low fault counter is total count of vaporization low faults.

6. **MOTOR CURRENT AND COMM RESET**
   Motor current fault is total count of motor current faults. Comm reset fault is total count of communication reset faults.

7. **DAY COUNTER AND POWER UP**
   Day counter is the number of days the unit has been powered up. Power up counter is the total number of times the control module has been turned on.

8. **OVER TEMPS WARNING COUNTER**
   Counts the total number of Over Temp warnings.

9. **AUTO OVERTEMP RESET COUNTER**
   Counts the total number of times the Over Temp was reset.

SET POINTS MENU

1. **USER LEVEL**
   The options are BASIC and ADVANCED.
   Basic – access to basic menus.
   Advanced – access to advanced menus (requires password).

2. **PASSWORD**
   A password is needed to access the advanced menus. To enter in the password, use the increase or decrease value buttons. Password 5 allows advanced menu items to be changed.

3. **SELECT TEMPERATURE SETPOINT**
   The ambient temperature below which the unit will energize is set on this screen. When the outside temperature is below this setpoint, the unit will be allowed to operate if requested. The factory default is 38° F (3° C). The range is from 0° F to 100° F (-18° C to 38° C).

4. **SELECT RUN TIMER VALUE**
   The run timer can be set from 0 to 1000 minutes. If zero is selected, the outputs will operate continuously, until control on is disabled. If another value is selected, the unit will run until the run timer counts down to zero, after which the unit will shut down and drop indication. The unit can be restarted by removing the contact closure between TB2-1 and 2, then reinstalling it. If Run Timer Pulse Mode is activated, the minimum run time value is 10 minutes. The factory default setpoint is 60 minutes.

5. **RUN TIMER PULSE MODE**
   The choices are on or off, factory default is off. When on is selected, a pulse will start run time sequence and continue until run timer has timed out. When off is selected, run timer will time out as long as remote is on. When remote on is removed blower will stop.

6. **SELECT SNOW TIMER VALUE**
   The snow timer can be set from 10 to 1000 minutes. The snow time starts counting down when the moisture detector no longer sees snow. The factory default setpoint is 60 minutes.

7. **SELECT SNOW SENSOR SPEED**
   Snow sense speed sets the delay time after the moisture detector sees moisture and starts the snow cycle. The delay time can be set from 1 to 60 seconds. The moisture sensor must see moisture for entire time to start cycle.

8. **SELECT SNOW INDICATION**

The choices are OFF or ON. With snow indication off, indication will remain off during snow time if no faults are present. With snow indication on, indication will remain on during snow time if no faults are present.

9. SELECT START DELAY VALUE

The start delay timer can be set from 0 to 250 seconds in 10 second increments. It is used to delay the start of GHAB so when several blowers are at the same location they do not start at same time.

10. SELECT BURNER OPERATION

The choices are LOW, HIGH, AUTO, AUTO OFF.

Hi Only – 100% BTU output with or without Rail Sensor.

Low Only – 50% BTU output of Hi with or without the rail sensor.

Auto – Switches between high and low dependant on the rail & duct temperature sensor and setpoint. Note: If no rail sensor is connected, it will run at low (50% output). Units with only single stage installed, should select high only.

Auto Off – When rail temperature reaches the rail temp setpoint, the GHAB will shut down. When the rail temperature lowers to the ambient temperature setpoint, the GHAB will start again.

11. OPERATION MODE

The choices are NATURAL, PROPANE, COLD AIR, COLD AIR/PROPANE, COLD AIR/NATURAL.

NATURAL – The GHAB's burner is fueled by natural gas.

PROPANE – The GHAB's burner is fueled by propane.

COLD AIR – The GHAB will turn its blower on with air temperature. It will not use a burner.

COLD AIR/PROPANE –The GHAB will turn its blower on with air temperature. It will then turn its propane burner on with moisture or control.

COLD AIR/NATURAL –The GHAB will turn its blower on with air temperature. It will then turn its natural gas burner on with moisture or control.

12. SELECT MOTOR SIZE

The choices are:

2 HP 230V 1PH, 3 HP 230V 1PH, 5 HP 230V 1PH,
2 HP 460V 3PH, 3 HP 460V 3PH, 5 HP 460V 3PH,
2 HP 575V 3PH, 3 HP 575V 3PH, 5 HP 575V 3PH,
2 HP 3PH Drive, 3 HP 3PH Drive, 5 HP 3PH Drive
2 HP 230V 3PH, 3 HP 230V 3PH, 5 HP 230V 3PH.

13. RAIL TEMP SETPOINT

This can be set from 0° F to 280° F (-18° C to 138° C).

14. DUCT TEMP SETPOINT
This can be set from 150° F to 250° F (66º C to 121º C).

15. DUCT PRESSURE HIGH SETPOINT
This can be set from 3” H2O to 30” H2O.

16. DUCT PRESSURE LOW SETPOINT
This can be set from 0” H2O to 5” H2O.

17. GAS PRESSURE HIGH SETPOINT
This can be set from 7” H2O to 30” H2O.

18. GAS PRESSURE LOW SETPOINT
This can be set from 0” H2O to 10” H2O.

19. MOTOR CURRENT HIGH SETPOINT
This can be set from 5 to 100 amps.

20. MOTOR CURRENT LOW SETPOINT
This can be set from 0 to 10 amps.

21. MOTOR VOLTAGE HIGH SETPOINT
This can be set from 250 to 650 volts.

22. MOTOR VOLTAGE LOW SETPOINT
This can be set from 150 to 550 volts.

23. AC FREQUENCE HIGH SETPOINT
This can be set from 0 to 100 Hz.

24. AC FREQUENCE LOW SET POINT
This can be set from 0 to 100 Hz.

25. LOCAL WITH/WITHOUT AIR TEMPERATURE
Sets the local feature to, or not to, be dependant on the air temperature.

26. OVERTEMP BYPASS
With overtemp bypass enable, the unit will not fault if the overtemp sensor is missing. This feature is only for use on units that have a two wire overtemp sensor. Current production units are equipped with a four wire overtemp sensor. **NOTE: BYPASSING THE OVERTEMP SENSOR MAY CAUSE HARMFUL OPERATING CONDITIONS.**
The following steps are required to bypass the overtemp sensor:

a) Display: MENU SELECT

SETPOINTS

b) Select: ADVANCED

c) Enter password: 10

d) Display screen: OVERTEMP BYPASS
DISABLED

e) Change to: ENABLED

27. SELECT F OR C
Will change the temperature scale to either Fahrenheit or Celsius.

28. AUTO OVERTEMP RESET
Auto overtemp reset will reset the overtemp once it has been triggered.

29. SELECT TANK SIZE
The choices are no tank sensor, tank heater, 250 gallon increments up to 5,000 gallons. No tank sensor should ALWAYS be selected UNLESS a tank sensor reporting to the module is installed. Note: Tank Size menu is only available if propane is selected.

30. TANK SERIAL #
Tank serial # is the tank level monitor's serial number. This is only used if a tank sensor reporting to the module is installed.

31. MACHINE SERIAL NUMBER
Machine serial # is the serial number of the whole GHAB unit.

32. SERIAL NUMBER/MAC
Shows the MAC address for the unit.

33. AMBIENT OFFSET
Used to calibrate the ambient temperature sensor.

34. RAIL OFFSET
Used to calibrate the rail temperature sensor.

35. DUCT OFFSET
Used to calibrate the duct temperature sensor.

36. PROG REV AND DATE
Shows the program revision and the date it was complied.

37. BOOTLOADER

The choices are DO NOT RUN BOOTLOADER, START FACTORY DEFAULT BOOTLOADER and START NEW CODE.

DO NOT RUN BOOTLOADER – Will not run the bootloader.

START FACTORY DEFAULT BOOTLOADER – Will run the factory bootloader.

START NEW CODE – Will download and run the new code.

FACTORY DEFAULTS MENU

Factory default is used to place all parameters back to factory default settings.

To restore to factory default:

In the menu selection, select FACTORY DEFAULTS and then press either the up or down mode button. Next press either the increase or decrease value button to restore to default.

AUTO/OFF/LOCAL SWITCH (SS1)

a) AUTO: This position will allow operation by placing a circuit closure across terminal posts 1 and 2. It will also allow operation by an optional snow detector.

b) OFF: If off, GHAB cannot be run from remote or snow detector.

c) LOCAL: If LOCAL without air temp parameter is enabled, placing SS1 in the LOCAL position enables the snow melter regardless of outside air temperature. The snow melter will remain on until LOCAL is turned off. This is useful for hot weather testing.

C. LED STATUS INDICATING LIGHTS

1 AIR TEMPERATURE:

On when the ambient air temperature is below set point.

2 MOISTURE:

On when the optional snow detector sensing head(s) senses moisture.

3 CONTROL:

On when there is a circuit closure across terminal posts 1 and 2.

4 BLOWER:
On when the controller has turned on the output to the blower motor contactor.

5 AIRFLOW:
On when the sail switch in the air stream is sensing adequate airflow.

6 IGNITION:
On when the controller has enabled the output to the ignition transformer.

7. HIGH GAS VALVE:
On when the controller has enabled the output to the high gas valve.

8. LOW GAS VALVE:
On when the Controller has enabled the output to the Low Gas Valve.

9 FLAME:
On when the flame sensing determines that there is proper combustion.

10. INDICATION:
On when there is a circuit closure across terminal posts 1 and 2 and the unit is operating, or the air temperature is above the set point. Also may be on when there is a fault condition under snow detector.

11. FAIL:
This LED is on when ever a fault is present.

D. OPERATION

With switch SS1 in the “auto” position, the unit can be activated by applying a circuit closure between terminals TS1-1 and 2. If the outside temperature is above set point the unit will not start a snow melt sequence but will turn on the “indication” LED and provide a relay contact closure between TS1-3 and 4 to indicate to the remote station that the unit is operational.

If a circuit closure exists between TS1-1 and 2, and the air temperature is below set point. the unit will begin a snow melt sequence. The unit executes a 0 to 300 sec. time delay depending on the setting of the START DELAY TIMER. Then, a 10-sec. audible tone sounds as a warning that the blower motor is about to turn on.

The airflow switch is checked to see if it is closed. If it is, the blower will display SAIL SWITCH ON FAULT.

If the airflow switch is open the motor will turn on. After the blower motor is turned on, the airflow switch is monitored. It closes if airflow is normal. If it does not close within 10 sec. (or 30 sec. for an AC drive) after blower turn-on, the blower displays SAIL SWITCH OFF FAULT. When the airflow switch closes, a 30 second prepurge time will start. After the prepurge time is completed the gas valve opens, the ignition turns on and the burner is monitored for a normal flame condition. If a flame is not detected within 10 seconds, the gas valve is closed, the ignition spark is removed and the blower displays NO FLAME DETECTED FAULT.

If a normal flame condition is detected the “indication” contact closure is established between TS1-3 and 4. The unit will run for a period of time determined by the setting of the RUN TIMER. If the run timer is set at “0” the unit will continue to run until the circuit closure between TS1-1 and 2 is removed.

If the blower is equipped with the two stage gas valve option and the rail temp sensor is installed, then under normal operation when the rail reaches the preset temperature setting, the low gas valve will open and the high gas valve will close. This will result in a fuel reduction of 50%. When the rail falls below the programmed temperature, the high gas valve will open and the low gas valve will close resulting in the burner returning to 100% capacity.

If the blower is equipped with the two stage gas valve option and the duct temp sensor is installed, then under normal operation when the duct reaches the preset duct temperature setting, the low gas valve will open and the high gas valve will close. This will result in a fuel reduction of 50%. When the duct falls below the programmed temperature, the high gas valve will open and the low gas valve will close resulting in the burner returning to 100% capacity. If the duct temp sensor sees a temperature above 325 ^{o} F (163º C) both gas valves will be disabled. This prevents over temps.

There is a burner control adjustment available in the control module adjustments that allow the burner to be set to high only, low only or automatic controlled by the rail temp

sensor. If the two-stage option is not installed, the burner control switch should be set to high only. Refer to (SET UP AND ADJUSTMENTS) in Section IV 8.

SNOW DETECTOR OPERATION. If the unit is operating with one or two optional snow detector assemblies and moisture is detected by either (or both), a snow melt sequence will begin, provided that the air temperature is below the set point. The unit will start as described in Section IV Part B under (Select Snow Timer).

E. FAULT CONDITIONS

1. SAIL SWITCH ON FAULT:

During startup the processor checks the status of the airflow switch. If the airflow switch is closed or shorted the blower motor will turn on and the blower will run a 4-minute purge to try to clear the airflow switch. The motor will then shut off and sit idle for 1 minute. Upon completion of this 5-minute cycle, the blower will once again check the airflow switch for proper operation. If the airflow switch still shows that it is closed it will run the 5-minute loop again. This will repeat until fault is cleared or blower is no longer called for.

2. SAIL SWITCH OFF FAULT:

Sail switch off fault is set when blower is running and air flow switch is open. After the fault is set the blower motor will run a 4-minute purge to try to clear the airflow switch. The motor will then shut off and sit idle for 1 minute. Upon completion of this 5-minute cycle, the blower will once again check the airflow switch for proper operation. If the airflow switch still shows that it is open it will run the 5-minute loop again. This will repeat until fault is cleared or blower is no longer called for. Check to see if the sail switch is free to move and if there are any obstructions in duct work.

3. NO FLAME DETECTED FAULT:

No flame detected fault is set when blower is running and air flow switch is closed with gas valve open. If no flame is detected within 10 seconds the fault will be set. After the fault is set the blower motor will run a 4-minute purge to try to clear the flame rod. The motor will then shut off and sit idle for 1 minute. Upon completion of this 5-minute cycle, the blower will once again check the flame rod for proper operation. If no flame is present it will run the 5-minute loop again. This will repeat until fault is cleared or blower is no longer called for. Check to see if the flame rod is shorted to ground, the flame rod is loose, the flame rod is dirty or if the insulators is fully installed so that no moisture can short out the flame rod.

4. FLAME DETECTED ON FAULT:

Flame detected on fault is set when blower is running and air flow switch is closed with gas valve closed. If flame is detected before gas valve is opened the fault will be set. After the fault is set the blower motor will run a 4-minute purge to try to clear the flame rod. The motor will then shut off and sit idle for 1 minute. Upon completion of this 5-

minute cycle, the blower will once again check the flame rod for proper operation. If flame is present with gas off it will run the 5-minute loop again. This will repeat until fault is cleared or blower is no longer called for. Check to see if the flame rod is shorted to ground, the flame rod is loose, the flame rod is dirty or if the insulators is fully installed so that no moisture can short out the flame rod.

5. GAS VALVE FAILURE:
During the blower shutdown operation if the unit senses flame after the post-purge, the unit will not shutdown. Instead it will go into gas valve failure mode. In this mode the blower continues to run, the reply will also indicate a problem, and the buzzer will sound. The unit will lock out all other operations and will not be able to be reset except at the unit itself.

6. CHECK FUSE # 1 24 VDC POWER:
Fuse # 1 is tripped. Check the following circuits:

a. Overtemp switch and wiring.
b. Check TS1-2 +24 control on wiring.

7. CHECK FUSE # 2 IGNITION TRANSFORMER:
Fuse # 2 is tripped. Check the following circuits:

a. Ignition transformer and wiring.

8. CHECK FUSE # 3 GAS VALVE / SAIL SWITCH:
Fuse # 3 is tripped. Check the following circuits:

a. Check Sail switch and wiring.
b. Check hi and low gas valve and wiring.
c. Check external gas valve and wiring.

9. CHECK FUSE # 4 BLOWER MOTOR:
Fuse # 4 is tripped. Check the following circuits:

a. Check blower motor contactor and wiring.

10. CHECK FUSE # 6 SNOW HEAD # 1:
Fuse # 6 is tripped. Check the following circuits:

a. Check snow detector head # 1 and wiring.
b. Check Gas pressure sensor and wiring.
c. Check Duct pressure sensor and wiring.

11. CHECK FUSE # 7 SNOW HEAD # 2:
Fuse # 7 is tripped. Check the following circuits:

a. Check snow detector head # 2 and wiring.
b. Check Sail switch and wiring.

12. CHECK FUSE # 9 ANALOG 5VDC:
Fuse # 9 is tripped. Check the following circuits:

a. Check 5V supply for pressure sensor.

13. CHECK FUSE # 10 PRESSURE/BAT CHARGER:
Fuse # 10 is tripped. Check the following circuits:

a. Check pressure sensor.
b. Check 24V supply for battery backup.

14. OVERTEMP FIX PROBLEM PRESS DECREASE:
Overtemp sensor has tripped. If the temperature inside the Tie duct exceeds 375 degrees F, it will cause the ductwork overtemp circuit to trip, shutting down the HAB system. Only pushing the decrease value push button will reset the unit, giving opportunity to check the cause of the overtemp condition.

15. OVERTEMP FIX PROBLEMPRESS DECREASE ___ MIN:
The overtemp sensor has tripped. The HAB system will shut down for some time period then it will reset the unit. NOTE: AUTO OVERTEMP RESET must be enable in order to see this fault.

16. OVERTEMP WARNING RESTART IN ___ SEC:
If the temperature is close to overtemp value, the unit will restart in a certain time period.

17. OVERTEMP MISSING INSTALL OVERTEMP:
Caused my missing overtemp sensor.

18. MOTOR VOLTAGE LOW:
Motor voltage low is caused by inadequate electrical service supply. During motor start up if motor voltage drops below 190 VAC, the motor will eventually be damaged. If this under-voltage occurs, an error will be set. Press decrease value button to clear the fault.

19. MOTOR VOLTAGE HIGH:
Motor voltage high is caused by high motor voltage. Can be caused by high voltage from the electric company.

20. MOTOR OVERLOAD, RESET OVERLOAD DEVICE:
High motor current will trip the motor overload on the control panel. This device is connected to the bottom of the motor contactor on the control panel. Reset by pressing the red button on the device. Check unit for high motor current, bad bearings, or obstructions in the blower wheel.

21. MOTOR CURRENT LOW:
Caused by low motor current.

22. MOTOR CURRENT HIGH:
Motor current high is caused when sensed current is 3 amps over motor name plate for 20 seconds. Check motor for high current, bad bearings, obstruction in blower wheel.

23. GAS PRESSURE LOW:

Gas pressure low is caused by supply gas pressure during operation dropping to a low level. Check gas delivery system.

24. GAS PRESSURE HIGH:
Gas pressure high is caused by high gas pressure going to the burner. Check gas delivery system. Adjust the regulator on the gas delivery system to lower the gas pressure.

25. DUCT PRESSURE LOW:
Duct pressure low is caused by not enough duct back pressure. Possible causes are missing flame cover or missing duct work.

26. DUCT PRESSURE HIGH:
Duct pressure high is caused by too much duct back pressure. Possible causes are duct work obstructions

27. PROPANE TANK LOW WARNING FILL TANK:
Propane tank low is caused by low propane tank level. Note propane tank level monitor must be installed and setup, for this warning to appear.

28. TANK VAPORIZATION PRESSURE LOW WARNING:
Tank vaporization pressure low warning is caused by low tank temperatures.

29. UTILITY POWER LOST:
Utility power lost is caused by no incoming AC voltage. Must have a battery backup in order to receive this fault.

V. SEASONAL MAINTENANCE

A. SPRING:

1. Turn off gas source.
2. Turn off electric power at source.
3. Disconnect and remove the control module. Store in a clean, dry place.
4. Turn off manual gas valve.

B. FALL

1. Check all ductwork for clear airflow. Ensure that the point and track duct nozzle screens are not damaged and are completely covering the openings. Make sure that no debris or rodents have obstructed any area of the ductwork.
2. Inspect the track duct nozzles for proper operation. The damper plate should rotate without binding. Ensure that the damper plate is in the proper position, then tighten the set screws and locking nut. Ensure that the damper plate is locked firmly in place.
3. Remove the flame duct cover. Check the burner. Make sure the spark igniter plug and flame rod are in good, clean condition. Check the wiring to make sure rodent or vibration have not damaged the insulation.
4. Check the airflow sail switch to make sure it is operating properly.
5. Replace the flame duct cover.
6. Install the control module and connect the wires.
7. Turn on the gas source.
8. Turn on the manual gas valve.
9. Turn on the electric power at source.
10. Perform the gas pressure regulator adjustment procedure as described on the following page of this manual.
11. Perform a flame failure test:
    a) Place switch SS1 in the FORCE position.
    b) Turn off the manual gas valve.
    c) Turn on the main circuit breaker.
    d) After 40 seconds (plus any start delay period) the fault message NO FLAME DETECTED FAULT should be displayed. If the fault does not appear, the control module is faulty and should be replaced.
12. Check the flame current. Refer to Section IV, Control Module (B), SET-UP AND ADJUSTMENT 18A.
13. Check the air temperature for proper setting.

VI. LOW PRESSURE REGULATOR ADJUSTMENT/OUTPUT TEMP TEST

A. Place switch SS1 in the FORCE position.

B. Turn the manual gas valve to "ON" position and turn power on.

C. Place the burner control in the hi-only position. Refer to Section IV SET-UP AND ADJUSTMENTS b. 7.

D. After the 30-second pre-purge period, the unit will ignite. Check the gas pressure value. Adjust the white plug in regulator until the gauge reads 11" water column for propane or 7" water column for natural gas. NOTE: Clockwise to increase pressure, counter-clockwise to decrease pressure.

E. Let the GHAB run for a 10 minute period.

F. After the 10 minute period, take temperature readings at both point nozzles.

G. Determine the ambient temperature at the location and subtract the ambient temperature from the point nozzle reading. This temperature should not exceed 250˚F for optimum efficiency.

H. If the temperature is above 250˚F, adjust the gas pressure at the low pressure regulator down (1" w.c. at a time) until you reach the desired temperature.

I. Replace the top plug.

J Return all switches to their normal operating position.

VII. TROUBLESHOOTING

A. UNIT DOES NOT START

1. Check circuit breaker.
2. Check control fuse. The control fuse is an auto resettable type fuse. To check, turn the main circuit breaker off for one minute, then turn back on
3. Check for 18VAC between the following points:
   TS1-6 and TS1-7
   TS1-6 and TS1-8.
   Change T1 control transformer if either measurement is incorrect.
4. Check for air temperature below set point.
5. Is the control module programmed for a start-up delay?
6. Monitor the fault display on the control module.
7. Turn the circuit breaker off, then reset the motor overload relay. The motor overload relay is adjustable. It should be set for the motor name plate current.
8. Push the RESET Button (PB1).

B. UNIT DOES NOT MAINTAIN OPERATION

1. Monitor the flame current as described in section IV B. 18.
2. Check the fuel supply. Refer to Section VID.
3. Check 230VAC and 115VAC from either leg to the center tap neutral (with the unit running). It must be within +10% to -10%.

4. Check the burner. The burner must be clean and free of carbon.

5. The flame rod should be clean and secure. Refer to section D for flame current test.

6. Check the wire from the flame rod to the control module for continuity. Pull the white plug connector on the lower right side of the control module. Use an Ohmmeter to measure continuity from the terminal of the flame rod to the white connector. The reading should be less than 1 ohm.

C. LOW HEAT LEVEL

1. Perform a regulator adjustment/output temp test refer to Section 5.
2. Check the fuel supply.
3. Make sure the burner is clean.
4. Make sure the orifice plate is installed for the fuel being used.
5. Check the low pressure regulator.
6. Check to see if the burner control is on low only or if it is in auto and the Rail Temp Sensor setting is forcing it to low output.

D. LOW AIRFLOW

1. Check for obstructions in all ductwork and the air intake.
2. If there is frost buildup on the air intake screen, move the screen to the "open" position.
3. Check the voltage and current levels on the blower motor.
4. Make sure knockouts on the track duct are pushed all the way back in the track duct.
5. Check the spacing between the inlet cone and the blower wheel. The gap should be less than 1/16 of an inch.

E. GAS VALVE

CAUTION

CHECK THE AREA TO BE SURE THERE ARE NO LINGERING GAS FUMES BEFORE DOING ANYTHING WHICH MAY CAUSE A SPARK!

1. Turn off gas to the blower.
2. Turn off power to the blower.
3. Check the gas valve for obstructions.
4. Check the gas valve for proper operation.

F. HIGH HEAT LEVEL

1. Check for proper orifice installation.
2. Perform the low pressure regulator and Temp Test found in Section VI.

VIII. SNOW DETECTOR

A. SNOW DETECTOR INSTALLATION

1. The snow detector sensing circuitry is contained within the control module. All that is required for snow detector operation is to connect the sensing head(s).

2. Either one or two sensing heads may be used.

3. Each sensing head has three lead wires; black, white, and green. Connect as follows:

   a) green: one or both connected to TS1-6.
   b) black #1: connected to TS1-7.
   c) black #2: connected to TS1-8.
   d) white: one or both connected to TS1-9.

   NOTE: Refer to the diagrams when connecting wires for the sensing heads. It is important to properly connect the sensing head wires. Improper connection of the sensing head wires may result in damage to the control module and/or the sensing head.

4. To operate more than one HAB unit from a HAB unit that is controlled by a snow detector(s), connect terminal posts #6 together and terminal posts #9 together. (Do not connect terminal post #6 to terminal post #9.) When connecting snow detectors to more than one HAB unit, first connect one HAB. Then connect the snow detector to one more HAB. If the snow detector does not operate properly, exchange L1 and L2 on the newest HAB circuit breaker. NOTE: BE SURE L1 AND L2 ARE DE-ENERGIZED BEFORE EXCHANGING THEM. Continue to add HABs to the snow detector in the same manner until all the desired HABs are connected. DO NOT EXCEED 200' CABLE LENGTH (18 AWG WIRE).

5. The sensing heads should be mounted in a vertical position.

6. Experience has shown that positioning a snow detector sensing head in the switch area between the ties and between the switch point and the track duct is effective. A second sensing head is then placed away from the switch area, such as on a bungalow or pole.

B. SNOW DETECTOR OPERATION

NOTE: A snow detector sensing head only detects moisture. With temperature sensing capability, the HAB unit assumes moisture is due to snow when the air temperature is below set point.

All operating functions are similar to remote operation with the following exceptions:

1. INDICATION: During normal operation under snow detector control, the indication contact across terminal posts 3 and 4 will not be closed.

2. TIMED OPERATION: The snow detector has many different time scenarios . Refer to Section IV Part B to determine which scenario best meets the needs in your location.

3. RUN TIMER: During remote operation, if the snow detector senses moisture, the unit will operate according to the settings. The unit will then operate for the duration of the run timer setting.

4. FAULT CONDITION: A fault condition under snow detector control will cause the indication contact across terminal posts TS-3 and TS-4 to close. To reset the unit after a fault condition, momentarily apply a circuit closure between terminal posts TS-1 and TS-2 with Ss1 in the Auto position. The unit may now be operated either under remote control or snow detector control.

C. SNOW DETECTOR MAINTENANCE

The snow detector sensing head contains a small, self-regulating heater that will melt snow or ice into water. The sensing head relies on moisture to create a low resistance circuit path. The heater will also cause the moisture to evaporate within a short period. If the surface becomes non-conductive due to contamination by grease or oil, the sensing head will not operate. To ensure effective and dependable snow detector operation, it is important to inspect the sensing heads frequently and clean them thoroughly if necessary.. Use a solution of water and mild detergent or isopropyl alcohol to clean the sensing grid. Use a clean, dry cloth to wipe the grid. Make sure there is no residue left on the surface.

D. SNOW DETECTOR TROUBLESHOOTING

NOTE: A newly-installed snow detector sensing head should operate 15-20 minutes to allow the internal heater to reach normal operating temperature.

1. NO HEAT ON THE SENSING HEAD

a. Check for voltage between terminal post 6 and 7, and between terminal post 6 and 8. It should be 18VAC □2VAC. If not:

(1) Check the display on the control module.
(2) The control transformer may be defective.
(3) There may be a bad circuit connection.

b. Remove the black and the green lead wires from the terminal posts. Check resistance between them. If resistance is greater than 10 ohms, the sensing head is defective and should be replaced.

2. DOES NOT DETECT MOISTURE

a. Clean the snow detector as described above.

b. If unit still does not detect moisture, check the wiring connections between detector head and terminal posts.

c. If unit still does not detect moisture, replace the control module with a known good control module. If still not operating properly, replace the sensing head.

NOTE: If a snow detector head becomes saturated with moisture, it can sometimes be restored to normal operation by removing it and "baking" it in a conventional oven for several hours. Do not exceed 150□F.

3. CONSTANT INDICATION OF MOISTURE DETECTION

a. Clean and adjust the snow detector heads as described in section C, Snow Detector Maintenance.

b. Remove white lead(s) from terminal post 9. If moisture indication is still on, the control module is defective and should be replaced.

IX. SPECIFICATIONS

VOLTAGE :	230VAC, 1PH 60 HZ, 50 Amp, With 115VAC/115VAC center tap neutral
MOTOR :	3 HP, 3450RPM, TEFC 85 Amp starting current 14.5 Amp running current
VOLTAGE :	230 VAC, 1PH 60HZ 50 AMP (3PH AC DRIVE)
MOTOR :	3 HP, 3450RPM, TEFC 18 Amp starting current 18 Amp running current
VOLTAGE :	460 VAC, 3PH 60HZ 15 AMP
MOTOR :	3 HP, 3450RPM, TEFC 37.5 Amp starting current 3.7 Amp running current
VOLTAGE :	575 VAC, 3PH 60HZ 15 AMP
MOTOR :	3 HP, 3450RPM, TEFC 30 Amp starting current 3 Amp running current
AIRFLOW :	2500 CFM
COMBUSTION RATE :	600,000 BTU/HR 300,000 BTU/HR
FUEL :	Propane or Natural Gas
FLOW RATE:	Natural Gas 600 CFH/300 CFH Propane: 240 CFH/120 CFH 6.6 GPH/3.3 GPH
INDICATION CONTACTS:	30VDC 1A or 125VAC 300mA

X. DRAWINGS

BUNGALOW POSITIONING	963N32902
GHAB SWITCH LAYOUT	9559-0020
BUNGALOW MAIN UNIT	9638-0501
GHAB MAIN UNIT	9558-6115
TIE DUCT ASSEMBLY 136LB E-CLIP	9528-4805
TIE DUCT ASSEMBLY 115LB E-CLIP	9528-4605
POINT / TRACK ASSEMBLY RH	9508-4000
POINT / TRACK ASSEMBLY LH	9508-4001
TRACK DUCT ASSEMBLY LH	9508-4002
TRACK DUCT ASSEMBLY RH	9508-4003
NOZZLE TRACK DUCT ASSEMBLY	927490
ISOLATION KIT, TIE DUCT POINT NOZZLE	9278-0021
ISOLATION KIT, TIE DUCT TRACK NOZZLE	9278-0027
HEAVY DUTY OFFSET DUCT WITH MIXER	9528-3402
2 INSULATED FLEX DUCT	9528-4220
TRACK DUCT, 5’ POINT	9278-0226
TRACK DUCT, 5’ MID	9278-0227
TRACK DUCT, 10’, MID	9278-1201
TRACK DUCT, 10’, HEEL	9278-1202
SWITCH ROD DUCT 7’	9278-0270
TRACK DUCT SUPPORT BRACKET ASSEMBLY	92774
GHAB ELECT. PANEL LAYOUT	9558-0150
GHAB ELECT. PANEL LAYOUT	9558-0156
GHAB ELECT. SCHEMATIC	9524-0125
GHAB ELECT. SCHEMATIC	9554-0133
GHAB ELECT. SCHEMATIC	9524-0223
GAS PIPING, 2 STAGE	9658-0138
BURNER ASSEMBLY	9528-0135

LIMITED WARRANTY

XI.

Railway Equipment Co., Inc. ("Railway") warrants all of its products to be free from defects in material and workmanship when used under specified operating conditions and within specified limits. Railway's warranty shall extend for a period of two (2) years from the date of shipment to the original purchaser.

This warranty is expressly in lieu of and excludes all other expressed or implied warranties, including but not limited to warranties of merchantability and fitness for a particular purpose.

Railway, its agents, or representatives shall in no circumstance be liable for any direct, indirect, special, penal, or consequential loss or damage of any nature resulting from the malfunction of the product.

Remedies under this warranty are expressly limited to repair or replacement of the product at the sole discretion of Railway.

Before returning any defective product to Railway, contact the factory at the address or telephone number at the bottom of this article for a Return Merchandise Authorization number and instructions as to how and where the return is to be shipped. Materials received without this authorization will be returned at the customer's expense.

Products returned to Railway under warranty must be shipped freight prepaid, and return freight charges for repaired or replaced products, in or out of warranty, will be at customer's expense.

Railway reserves the right to reject any warranty claim on a product that has been altered by the user or damaged in shipping due to inadequate packaging or mishandling by freight carrier.

By returning a product to Railway the owner grants permission to Railway to open and disassemble the product as required for evaluation. Railway has the sole responsibility for determining the cause an nature of failure, and Railway's determination with regard thereto shall be final. Railway reserves the right to repair or replace any unit at its sole discretion.

A returned product that is found, upon inspection by Railway, to be operational within specification is subject to an inspection and testing fee, regardless of its warranty period.

Railway's liability on any claim of any kind (including negligence) for any loss or damage arising out of or resulting from this agreement, or from the performance of breach thereof, of from the products or services furnished hereunder, shall in no case exceed the price of the specific product or service which gives rise to the claim. All such liability shall terminate upon the expiration of the warranty period of two (2) years, as hereinabove stated.

The furnishing of advice or other assistance without separate compensation therefor will not subject Railway to any liability, either in contract, warranty, tort (including negligence) or otherwise.

Any alteration or modification of the product, or addition on non-Railway components to the product, unless expressly permitted by Railway in its documentation, will void warranty coverage.

This warranty is non-transferable, and warranty coverage is limited to initial user only.

Installation and/or use of the product shall demonstrate acceptance of the terms of this warranty.

Each of the foregoing paragraphs in this article will apply to the full extent permitted by law. The invalidity, in whole or part, of any paragraph will not affect the remainder of such paragraph or any other paragraph.

RAILWAY EQUIPMENT CO.
P.O. Box 68 – Delano, Minnesota 55328 USA
Tel. (763) 972-2200 Fax (763) 972-2900
E-Mail - mail@rwy.com

(INTENTIONALLY LEFT BLANK)

PARTS LIST					
ITEM	PART NUMBER	REV	UOM	QTY	DESCRIPTION
1	9258-0021	A	EA	1	SNOW DETECTOR
2	9278-0232	B	EA	4	TRACK DUCT 20'
3	9368-0106	E	EA	1	DUCT ISOLATOR KIT, 9 X 9
4	9508-4000	A	EA	1	POINT/TRACK NOZZLE ASSY RH
5	9508-4001	A	EA	1	POINT/TRACK NOZZLE ASSY LH
6	9508-4002	A	EA	1	OUTSIDE TRACK NOZZLE ASSY LH
7	9508-4003	A	EA	1	OUTSIDE TRACK NOZZLE ASSY RH
8	9528-3404	A	EA	1	DUCT, OFFSET, 2' HD NO MIXER
9	9528-4805	A	EA	1	TIE DUCT, 136# QUICK CHANGE
10	9528-5222	A	EA	1	FLEX DUCT 2'ST INS W/MIXER
11	9638-0501	K	EA	1	ASSY, BUNGALOW W 5HP 240V GHAB

REVISION HISTORY				
REV	ECO #	DESCRIPTION	DATE	BY
A	10-0026	NEW PART	9/24/10	MF
B	10-0031	NEW FLEX DUCT	01/07/11	MF
K	11-0014	NEW MODULE/THERMOCOUPLERS	07/08/11	GJ

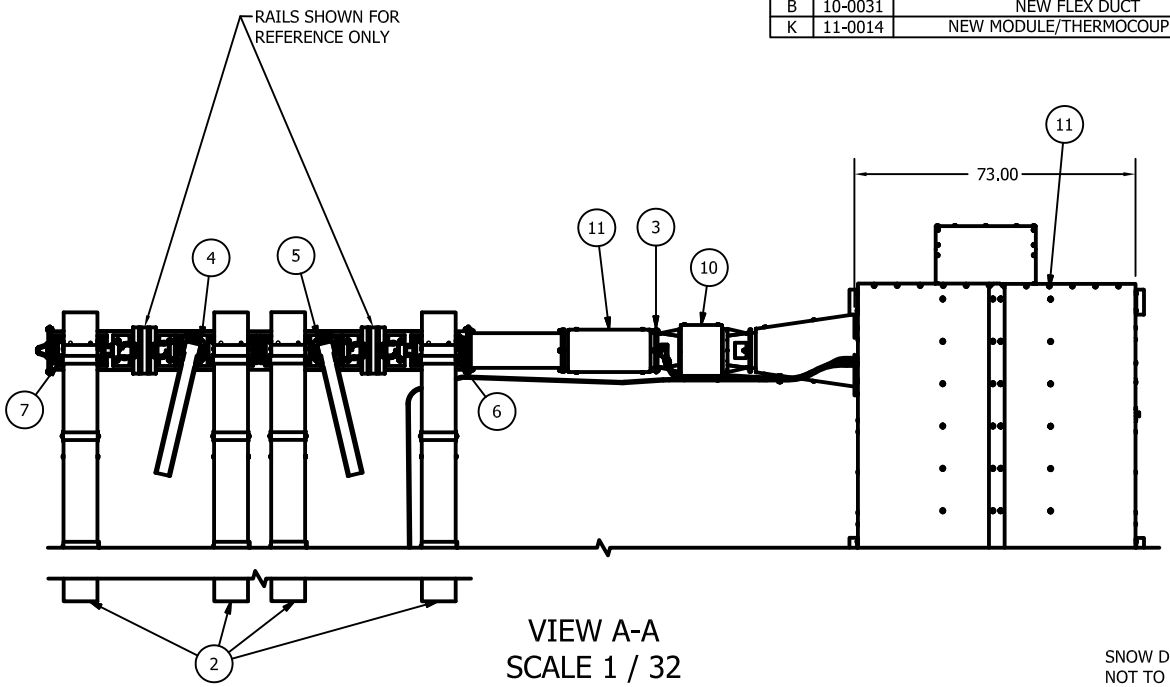

VIEW A-A
SCALE 1 / 32

SNOW DETECTOR
NOT TO SCALE

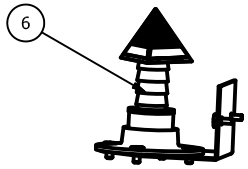

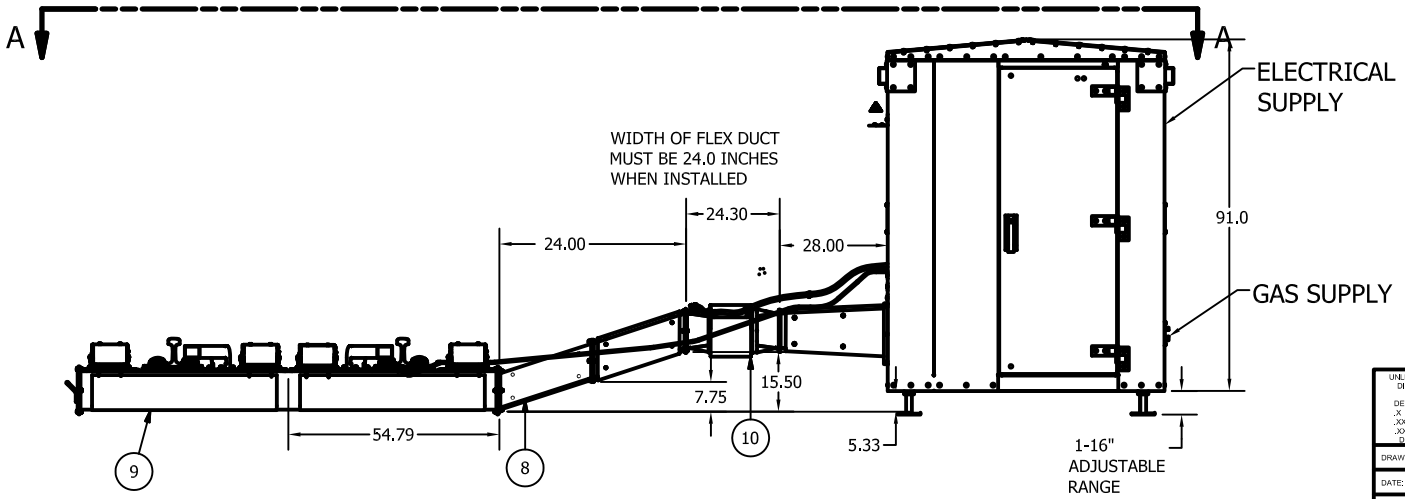

UNLESS OTHERWISE SPECIFIED:
DIMENSIONS ARE IN INCHES
TOLERANCES
DECIMALS .X ± 0.035 .XX ± 0.010 .XXX ± 0.005
ANGULAR ± 0.5
FRACTIONS ± 1/32
DO NOT SCALE DRAWING

RAILWAY EQUIPMENT CO.
MINNEAPOLIS, MINNESOTA (763) 972-2200

TITLE: BUNGALOW, GHAB, 136# TIE DUCT

(ASSEMBLY / B. O. M.)

DRAWN: EJS
DATE: 08/02/2010
MATL: N / A
BEND ALLOWANCE: N / A
DWG NO: 963N32902
REV: K
SCALE: 1 : 25
DWG SIZE: B
SHEET 1 OF 2

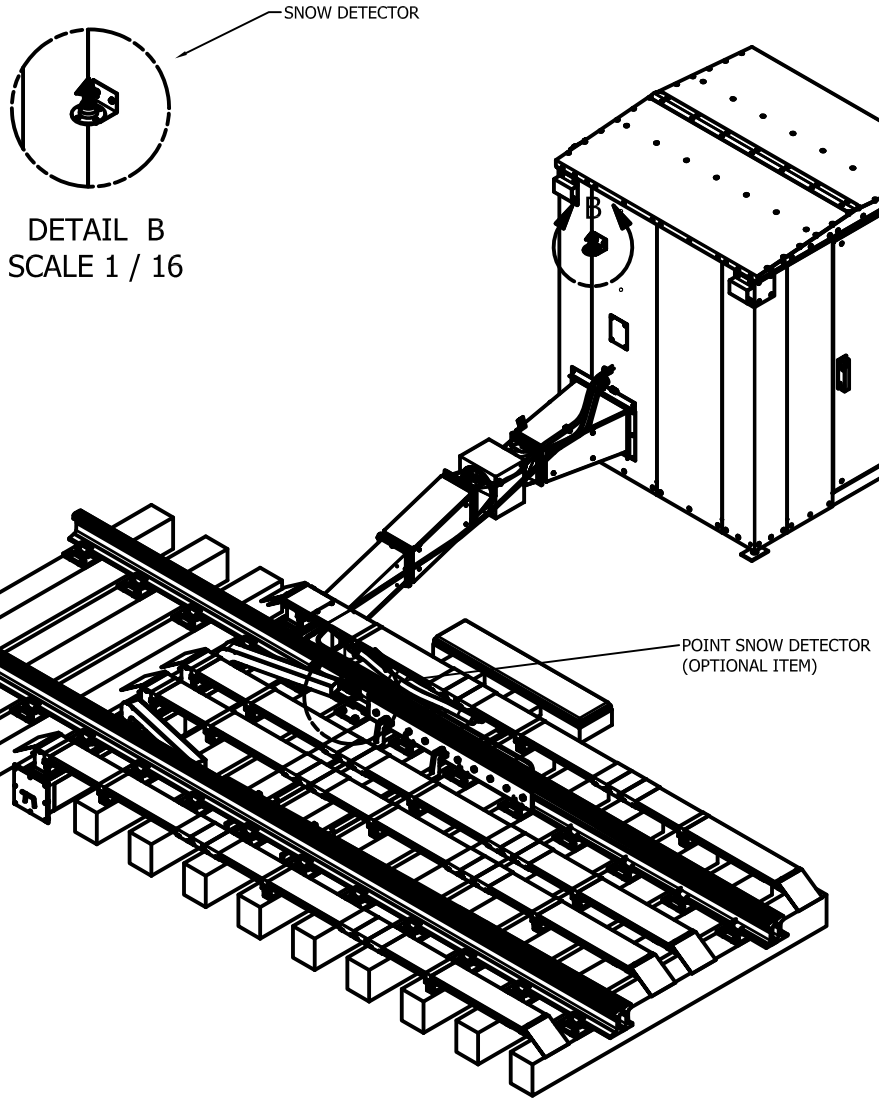

UNLESS OTHERWISE SPECIFIED:
DIMENSIONS ARE IN INCHES
TOLERANCES
DECIMALS: .X ± 0.035, .XX ± 0.010, .XXX ± 0.005
ANGULAR ± 1°
FRACTIONS ± 1/32
DO NOT SCALE DRAWING

RAILWAY EQUIPMENT CO.
MINNEAPOLIS, MINNESOTA (763) 972-2200

TITLE: BUNGALOW, GHAB, 136# TIE DUCT

DRAWN: GJONAS

DATE: 07/12/11

MAT'L:

BEND ALLOWANCE:

DWG NO: 963N32902

REV: K

SCALE: 1:32

DWG SIZE: B

SHEET 2 OF 2

SYM.	E.C.O.	BY	REVISION DESCRIPTION	DATE	APPROVED
A	07-0013	RJ	NEW PART	6/27/07	---

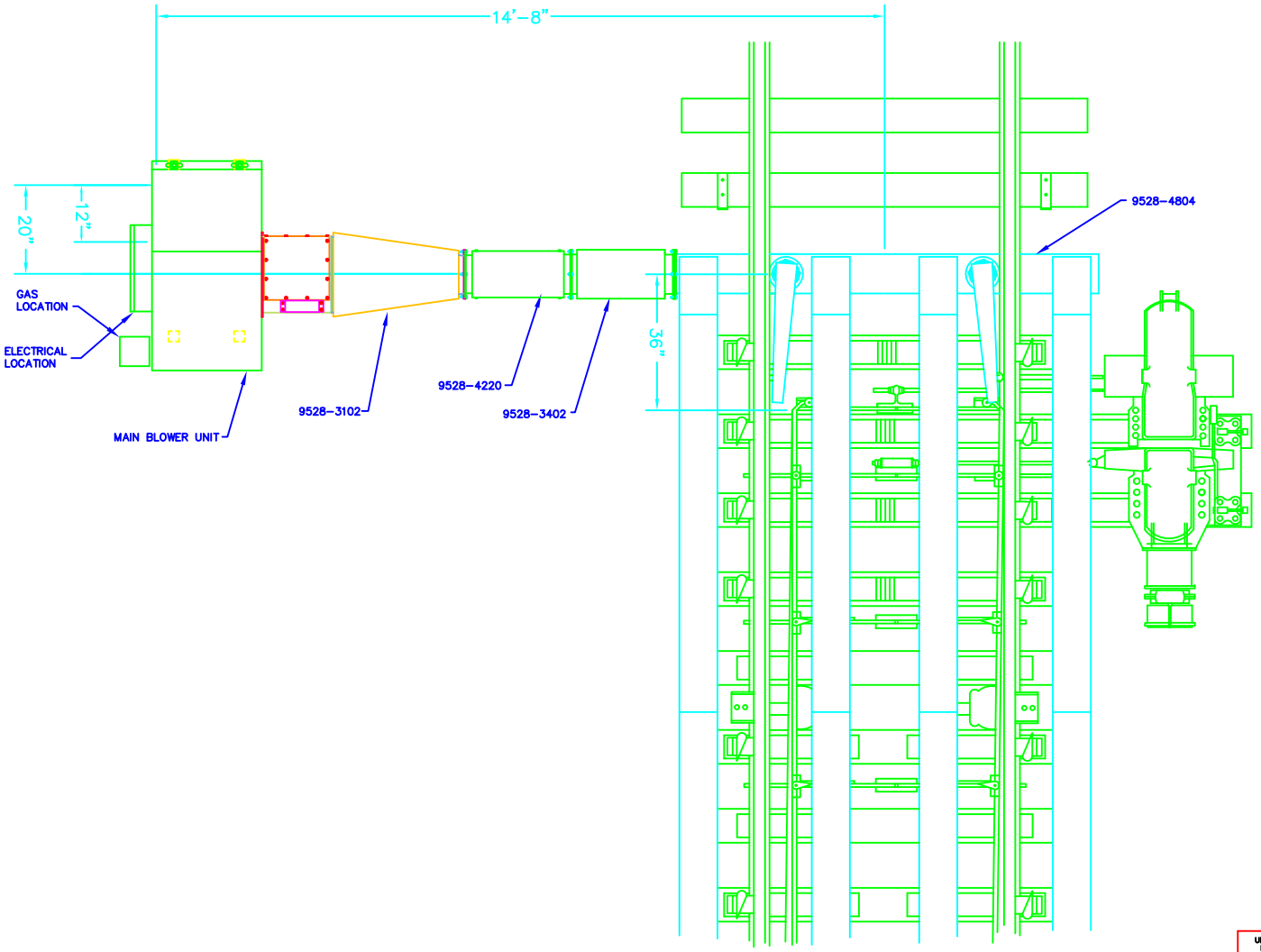

UNLESS OTHERWISE SPECIFIED:
DIMENSIONS ARE IN INCHES
TOLERANCES
DECIMALS .X ± .035 .XX ± .010 .XXX ± .005
ANGULAR ± 0.5°
FRACTIONS ± 1/32
DO NOT SCALE DRAWING

RAILWAY EQUIPMENT CO.
DELANO, MINNESOTA (763) 972-2200

DRAWN	RJ
DATE	6/27/07
MATERIAL	ASSY
BEND ALLOWANCE	BA=0.000 for 90°
TITLE	GHAB SWITCH LAYOUT (ASSEMBLY)
DWG NO.	9559-0020
REV	A
SCALE	N/A
DRAWING SIZE	B
SHEET	1 OF 1

Parts List					
ITEM	PART NUMBER	REV	UOM	QTY	DESCRIPTION
1	14042	A	EA	1	BAG, 4 X 6 002 ZIP TOPS
2	14165	-	EA	4	LATCH FOR SCREENS
3	2831551142	-	EA	2	BOLT, 1/4-20 X 3 HEX HEAD
4	2831851116	-	EA	11	BOLT, 3/8-16 X 1 HEX CAP
5	2831851120	-	EA	12	BOLT, 3/8-16 X 1-1/4 HEX HEAD
6	2832-5101	-	EA	2	NUT, 1/4-20 HEX
7	2832-5901	-	EA	30	NUT, 1/4-20 CENTERLOCK
8	2832-8101	-	EA	21	NUT, 3/8-16 HEX
9	2833-5129	-	EA	4	WASHER, 1/4 X 1.5 FENDER
10	2833-5211	-	EA	2	WASHER, 1/4 SPLIT LOCK
11	2833-8110	-	EA	10	WASHER, 3/8 FLAT
12	2833-8210	-	EA	21	WASHER, 3/8 SPLIT LOCK
13	29017	-	EA	10	BOLT, #8-32 X 3/8 WASHER HEAD
14	29032	-	EA	7	BOLT, 1/4-20 X 3/4 HEX SLOT
15	29051	-	EA	65	BOLT, 1/4-20 X 1/2 WITH 1/2 HD
16	45017	-	EA	1	BALL VALVE, 3/4, BRASS
17	45039	A	EA	1	REGULATOR, LOW PRESSURE
18	60114	A	EA	1	UNION, 3/8 SCH 40 BLK
19	60118	-	EA	1	REDUCER, 1 TO 3/8 SCH 40 BLK
20	60128	-	EA	1	NIPPLE, 3/8 X 2 SCH 40 BLACK
21	60154	-	EA	22	GASKET, 1/2X1 ADHESIVE
22	60185	A	FT	14	GASKET, 0.25 X 0.75 ADHESIVE BACK
23	60190	-	EA	1	HOSE, 3/8X24 SS BRAIDED
24	60236	-	EA	1	TEE, 3/8 X 1/4 X 3/8 SCH 40
25	60237	-	EA	2	FITTING, COMPRESSION 1/4X1/4
26	61011	-	EA	2	NIPPLE, 3/4 X 1.5 SCH 40 BLACK
27	61025	-	EA	2	NIPPLE, 1 X 2 IN SCH 40 BLACK
28	61035	-	EA	1	REDUCER, 1 TO 3/4 SCH 40 BLACK
29	61052	-	EA	1	FLEXHOSE 1 X 24-1.25 IN OD
30	61058	-	EA	2	ELBOW, 1IN SCH 40 BLACK
31	61065	A	IN	24	TUBING, 1/4INCH O.D. COPPER
32	93533	D	EA	1	GASKET, 11X12, HIGH TEMP
33	9508-0356	A	EA	1	ASSY, HI TEMP SENSOR SHORT
34	9508-0416	A	EA	1	RAIL TEMP SNSR T/C MAGNETIC
35	9528-3103	A	EA	1	DUCT, OFFSET, 2' LIFT-OUT
36	9528-3209	B	EA	1	ASSY, FLAME DUCT, 18X12X4'
37	9538-6115	K	EA	1	MAIN GHAB, HIGH, 5HP
38	960615	A	EA	2	TRIM, OUTLET TOP
39	960616	A	EA	3	TRIM, OUTLET SIDE
40	960617	A	EA	2	TRIM, OUTLET BOTTOM
41	960631	A	EA	1	TRIM, OUTLET SIDE
42	9608-0405	A	EA	1	ASSY, TEMPERATURE SENSOR
43	9638-1000	B	EA	1	BUNGALOW, 2/5HP GHAB, 6 X 6
44	9638-1100	A	EA	1	ASSY, ELEC BUNGALOW 230 IPH

REVISION HISTORY				
RE	ECO #	DESCRIPTION	DATE	BY
K	11-0014	NEW MODULE/THERMOCOUPLERS	7/8/2011	GJ

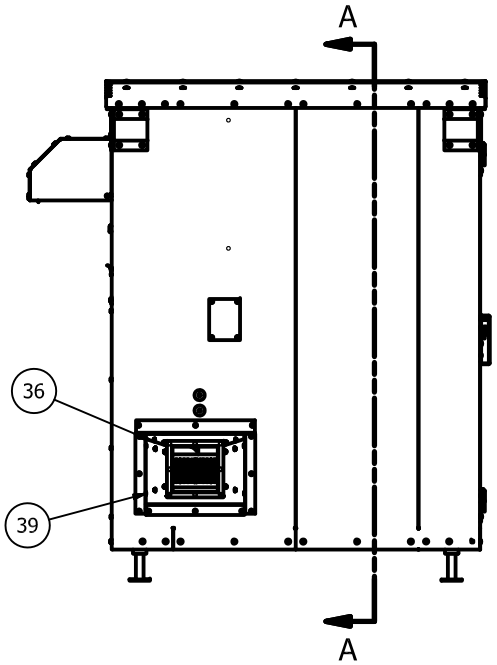

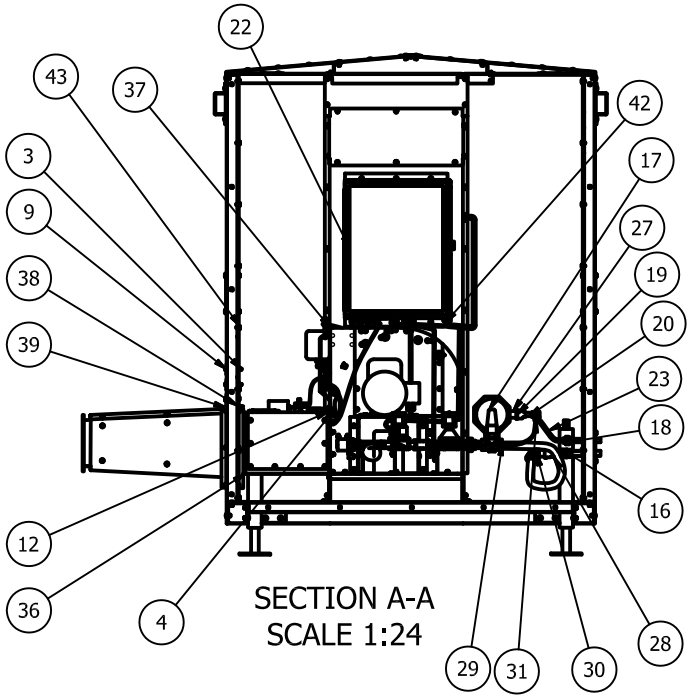

SECTION A-A
SCALE 1:24

UNLESS OTHERWISE SPECIFIED: DIMENSIONS ARE IN INCHES
TOLERANCES
DECIMALS .X ± 0.005 .XX ± 0.010 .XXX ± 0.005
ANGULAR ±
FRACTIONS ± 1/32
DO NOT SCALE DRAWING

RAILWAY EQUIPMENT CO.
MINNEAPOLIS, MINNESOTA (763) 972-2200

DRAWN: GJONAS
DATE: 07/08/11
MAT'L:
BEND ALLOWANCE:

TITLE: ASSY, BUNGALOW W 5HP 240V GHAB

DWG NO: 9638-0501K
REV: K
SCALE:
DWG SIZE: B
SHEET 1 OF 1

Parts List					
ITEM	PART NUMBER	REV	UOM	QTY	DESCRIPTION
1	26019	A	EA	1	BLOWER WHEEL, 1250 WITH HUB
2	26020	A	EA	1	INLET CONE, 1250 90%
3	28035	"	EA	6	MOUNT, RUBBER, M/M 1/4-20
4	28107	"	EA	1	NUT, 1/4-20 THUMB, NYLON
5	28126	"	EA	2	SPACER, 1/4 IN ID 3/8 IN LONG
6	2831-9003	"	EA	3	BOLT, 1/4-20 X 1 CARRIAGE
7	2831411108	"	EA	1	SCREW, #10-32 X 1/2 PAN SLT
8	2831411112	"	EA	1	SCREW, #10-32 X 3/4 PAN SLT
9	2831551110	"	EA	4	BOLT, 1/4-20 X 5/8 HEX HEAD
10	2831851116	"	EA	4	BOLT, 3/8-16 X 1 HEX CAP
11	2831861112	"	EA	23	BOLT, 3/8 X 0.75 CARRIAGE
12	2832-4101	"	EA	3	NUT, #10-32 HEX
13	2832-5101	"	EA	12	NUT, 1/4-20 HEX
14	2832-5901	"	EA	3	NUT, 1/4-20 CENTERLOCK
15	2832-8101	"	EA	14	NUT, 3/8-16 HEX
16	2832-8904	"	EA	27	NUT, 3/8-16 CENTERLOCK
17	2833-4210	"	EA	1	WASHER, #10 SPLIT LOCK
18	2833-4310	"	EA	4	WASHER, #10 EXT. STAR
19	2833-5110	"	EA	6	WASHER, 1/4 FLAT
20	2833-5211	"	EA	10	WASHER, 1/4 SPLIT LOCK
21	2833-8040	"	EA	4	RIVET, BUTTON HEAD PLATED STL
22	2833-8110	"	EA	4	WASHER, 3/8 FLAT
23	2833-8119	"	EA	8	WASHER, 3/8" X 1-1/2 FENDER
24	2833-8210	"	EA	14	WASHER, 3/8 SPLIT LOCK
25	29016	"	EA	2	BOLT, 1/4-20 X 1/2 HEX SLOT
26	29051	"	EA	70	BOLT, 1/4-20 X 1/2 WITH 1/2 HD
27	32002	"	SQFT	3.5	INSULATION, FIBERGLASS
28	60002	"	EA	1	3/8 ROMEX
29	60169	"	EA	2	TY-RAP 0.30 X 8
30	60172	"	EA	1	LUG, RING #10 22-18GA HI-TEMP
31	60185	A	FT	8	GASKET, 0.25 X 0.75 ADHESIVE BACK
32	60195	"	FT	6	GASKET, .25 X 1.0 ADHESIVE BK
33	6032-0110	"	EA	1	LUG, RING 1/4 22-18GA NYLON
34	6093-0100	"	EA	5	TY-RAP, 4IN 0.10 WIDTH
35	61032	"	EA	1	NIPPLE, 1 X 3 IN SCH 40 BLACK
36	61037	"	EA	1	NIPPLE, 1 X 17 SCH 40 BLACK
37	61058	"	EA	1	ELBOW, 1IN SCH 40 BLACK
38	61070	"	EA	4	U-BOLT, MRO BOLT #05
39	8040-0955	C	EA	1	NAMEPLATE, 954/955 GHAB
40	92919	A	EA	8	WASHER, 1/4 EXT. STAR
41	9338-0026	A	EA	1	ASSY, BUZZER
42	9508-0038	A	EA	1	ASSY, GAS SENSOR EXT CABLE
43	9508-0039	A	EA	1	ASSY, DUCT SENSOR EXT CABLE
44	9508-0430	A	EA	1	ASSY, WIRED IGNITION XFMER
45	9508-0431	B	EA	1	ASSY, HARNESS AIR FLOW SWITCH
46	9508-0495	B	EA	1	ASSY, FLAME WIRE
47	95201	C	EA	1	BASE, MOTOR, 184T, GHAB
48	95202	A	EA	1	PLATE, MOTOR BASE, 184T GHAB
49	952127	C	EA	1	STUD PLATE
50	9528-0135	B	EA	1	BURNER, 12IN
51	9558-0150	B	EA	1	ASSY, GHAB PANEL, 3HP 230V 1PH
52	960131	A	EA	1	ENCLOSURE, HAB
53	960632	B	EA	1	BLOWER, AIR CUT FLANGE 3/5HP
54	960801	A	EA	1	BUNGALOW ENCL MOUNTING PLATE
55	96346	A	EA	1	MOTOR MOUNTING PLATE, HAB
56	9638-0023	C	EA	1	ASSEMBLY, IGNITION WIRE
57	963800	B	EA	1	BLOWER OUTLET FLANGE 5HP
58	963801	B	EA	1	INTAKE BODY, 5HP BUNGALOW
59	963802	B	EA	1	PC, MOTOR BODY, HIGH 5HP
60	963803	B	EA	1	BLOWER SHROUD 3/5HP

Parts List					
ITEM	PART NUMBER	REV	UOM	QTY	DESCRIPTION
61	963804	B	EA	1	BASE, GHAB, 5HP
62	963805	A	EA	1	DEFLECTOR, INTAKE 5HP GHAB
63	963806	A	EA	1	SUPPORT, GAS 5HP BUNGALOW
64	963807	A	EA	3	SUPPORT, GAS LINE, 5 HP
65	963808	A	EA	1	CAP, INTAKE INSIDE 5HP
66	9658-0028	B	EA	1	ASSY, WIRED MOTOR, 3HP/230/1PH
67	9658-0138	A	EA	1	ASSY, GHAB PIPING 3HP BUNGALOW
68	R8039-0816	A	EA	1	LABEL, FAN ROTATION
69	R8039-0830	A	EA	1	LABEL, GHAB WARNINGS
70	R8039-0955	A	EA	1	LABEL, ID PLATE AGA/CSA
71	R9650-0105	C	EA	2	MANUAL, 965 BUNGALOW 3HP 230V

REVISION HISTORY				
REV	ECO	DESCRIPTION	DATE	BY
E	11-0025	NEW PART (REVED TO E TO MATCH EPICOR)	03/04/11	MF
K	11-0014	UPDATED MODULE REV J	07/21/11	GJ

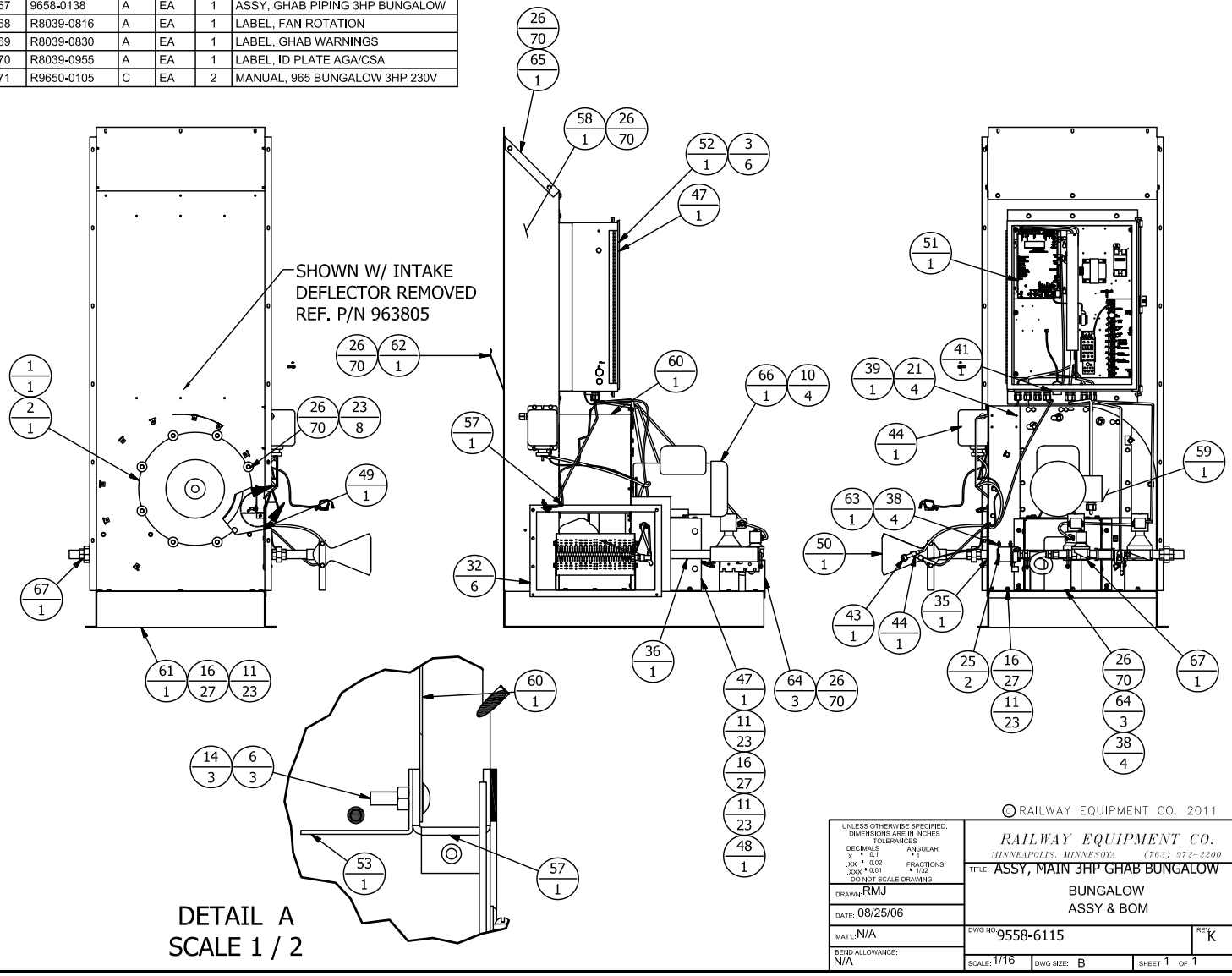

UNLESS OTHERWISE SPECIFIED: DIMENSIONS ARE IN INCHES TOLERANCES
DECIMALS .X ± 0.1 .XX ± 0.02 .XXX ± 0.01
ANGULAR ± 1
FRACTIONS ± 1/32
DO NOT SCALE DRAWING

DRAWN: RMJ
DATE: 08/25/06
MATL: N/A
BEND ALLOWANCE: N/A

RAILWAY EQUIPMENT CO.
MINNEAPOLIS, MINNESOTA (763) 972-2200

TITLE: ASSY, MAIN 3HP GHAB BUNGALOW
BUNGALOW
ASSY & BOM

DWG NO: 9558-6115 REV: K
SCALE: 1/16 DWG SIZE: B SHEET 1 OF 1

Parts List					
ITEM	PART NUMBER	REV	UOM	QTY	DESCRIPTION
1	927237	A	EA	2	COVER PLATE, TEMP SENSOR
2	2833-9009	-	EA	8	WASHER, 3/4 SPLIT LOCK
3	2833-8210	-	EA	4	WASHER, 3/8 SPLIT LOCK
4	2831851114	-	EA	4	BOLT, 3/8-16 X 1 HEX HEAD, SS
5	28121	-	EA	8	BOLT, 3/4-10 X 1 1/2 HEX SS
6	2831851116	-	EA	16	BOLT, 3/8-16 X 1 HEX CAP
7	2832-8904	-	EA	16	NUT, 3/8-16 CENTERLOCK
8	927366	A	EA	4	E-CLIP INSULATOR
9	927248	A	EA	4	RAIL CLIP, TIE DUCT
10	952266	A	EA	1	ASSY, TIE DUCT QUICK CHANGE
11	95234	C	EA	2	GASKET, 5HP TIE DUCT
12	952267	A	EA	2	COVER PLATE WITH LIFTING LUG
13	927355	B	EA	2	TIE PLATE 136# E-CLIP-PAD TYPE

Parts List					
ITEM	PART NUMBER	REV	UOM	QTY	DESCRIPTION
14	927367	B	EA	2	E-CLIP INSULATOR PAD TIE PLATE 136#
15	14151	-	EA	1	WIRE BURLAPBAG CLOSING TIES 6"
16	R8039-0904	D	EA	2	CAUTION LABEL, TIE DUCT 136#
17	R8039-0914	D	EA	1	TAG, ACCESS PARTS FOR TIE DUCT
18	9528-4109	B	EA	1	FLANGE ADAPTER KIT, 9X9 DUCT
19	14153	-	EA	1	BAG, WOVEN YELLOW 23.5 X 48
20	12425	-	IN	720	TAPE ROLL 2" WIDE HEAVY
21	2833-9020	-	EA	16	WASHER, M12 SPLIT LOCK
22	927602	A	EA	2	COVER, POINT/TRACK NOZZLE
23	927603	A	EA	2	COVER, OUTSIDE TRACK NOZZLE
24	2831951121	-	EA	12	BOLT, 1/2-13 X 1.25 HEX SS
25	2831951123	-	EA	4	BOLT, 1/2-13 X 1.75 HEX SS

REVISION HISTORY				
REV	ECO	DESCRIPTION	DATE	BY
A	06-0024	NEW PART	10/23/2006	WS

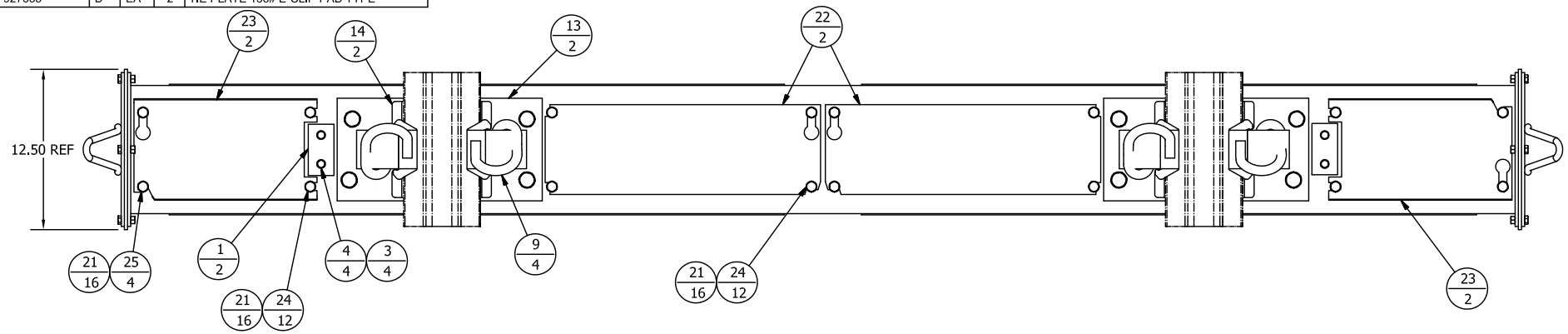

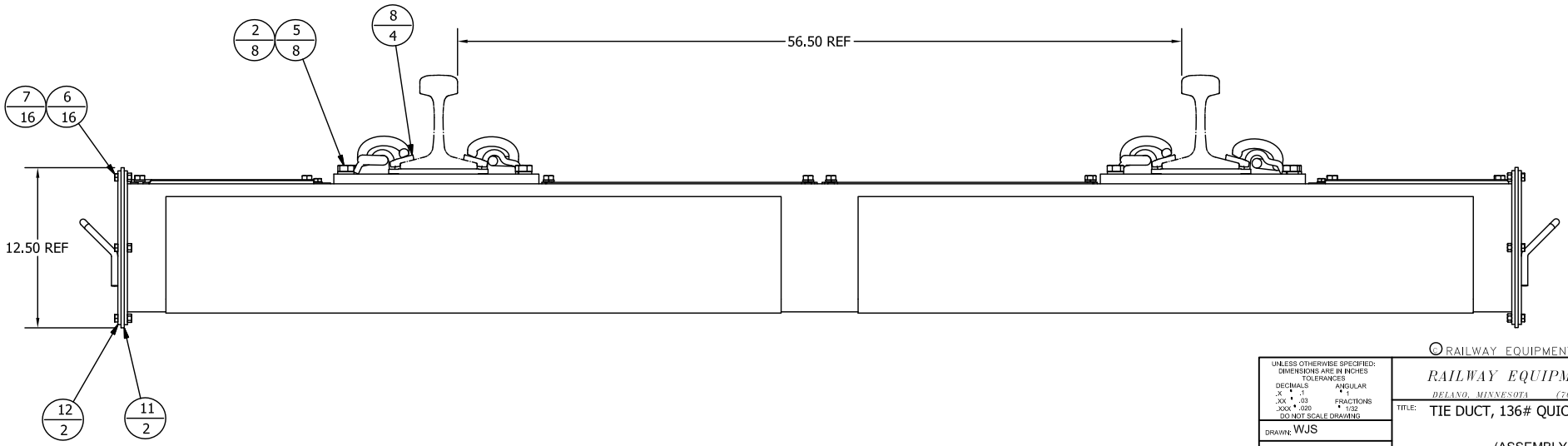

UNLESS OTHERWISE SPECIFIED:
DIMENSIONS ARE IN INCHES
TOLERANCES
DECIMALS .X ± .1 .XX ± .03 .XXX ± .020
ANGULAR ± 1°
FRACTIONS ± 1/32
DO NOT SCALE DRAWING

RAILWAY EQUIPMENT CO.
DELANO, MINNESOTA (763) 972-2200

TITLE: TIE DUCT, 136# QUICK CHANGE (ASSEMBLY)

DRAWN: WJS
DATE: 10/23/06
MAT'L: SEE B.O.M.
BEND ALLOWANCE: N/A
DWG NO: 9528-4805
REV: A
SCALE: 1/8
DWG SIZE: B
SHEET 1 OF 1

Parts List					
ITEM	PART NUMBER	REV	UOM	QTY	DESCRIPTION
1	927356	B	EA	2	TIE PLATE 115# E-CLIP PAD TYPE
2	927237	A	EA	2	COVER PLATE, TEMP SENSOR
3	2831951121	-	EA	12	BOLT, 1/2-13 X 1.25 HEX SS
4	2833-9009	-	EA	8	WASHER, 3/4 SPLIT LOCK
5	2833-8210	-	EA	4	WASHER, 3/8 SPLIT LOCK
6	2831851114	-	EA	4	BOLT, 3/8-16 X 1 HEX HEAD, SS
7	28121	-	EA	8	BOLT, 3/4-10 X 1 1/2 HEX SS
8	2831851116	-	EA	16	BOLT, 3/8-16 X 1 HEX CAP
9	2832-8904	-	EA	16	NUT, 3/8-16 CENTERLOCK
10	927368	A	EA	2	PAD FOR E-CLIP RUBBER 115# TIE
11	927366	A	EA	4	E-CLIP INSULATOR
12	927248	A	EA	4	RAIL CLIP, TIE DUCT
13	952266	A	EA	1	ASSY, TIE DUCT QUICK CHANGE

Parts List					
ITEM	PART NUMBER	REV	UOM	QTY	DESCRIPTION
14	95234	C	EA	2	GASKET, 5HP TIE DUCT
15	952267	A	EA	2	COVER PLATE WITH LIFTING LUG
16	14151	-	EA	1	WIRE BURLAPBAG CLOSING TIES 6"
17	R8039-0905	D	EA	2	CAUTION LABEL, TIE DUCT 115#
18	R8039-0915	D	EA	1	TAG, ACCESS PARTS FOR TIE DUCT
19	9528-4109	B	EA	1	FLANGE ADAPTOR KIT, 9X9 DUCT
20	14153	-	EA	1	BAG, WOVEN YELLOW 23.5 X 48
21	12425	-	IN	720	TAPE ROLL 2" WIDE HEAVY
22	2833-9020	-	EA	16	WASHER, M12 SPLIT LOCK
23	927602	A	EA	2	COVER, POINT/TRACK NOZZLE
24	927603	A	EA	2	COVER, OUTSIDE TRACK NOZZLE
25	2831951123	-	EA	4	BOLT, 1/2-13 X 1.75 SS HEX

REVISION HISTORY				
REV	ECO	DESCRIPTION	DATE	BY
A	06-0024	NEW PART	10/23/2006	WS

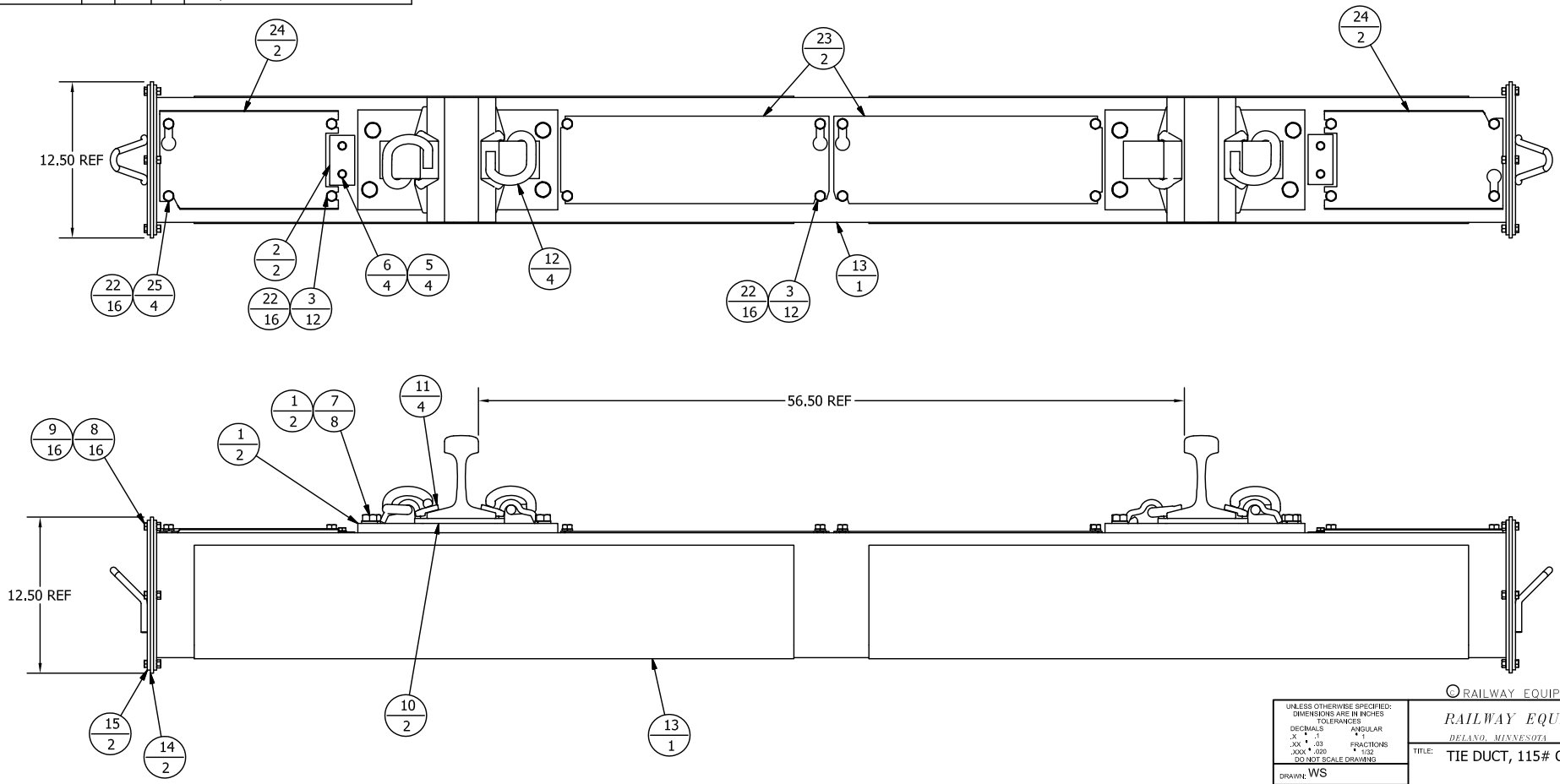

UNLESS OTHERWISE SPECIFIED:
DIMENSIONS ARE IN INCHES
TOLERANCES
DECIMALS .X ± .1 .XX ± .03 .XXX ± .020
ANGULAR ± 1
FRACTIONS ± 1/32
DO NOT SCALE DRAWING

DRAWN: WS

DATE: 10/23/06

MAT'L: SEE B.O.M.

BEND ALLOWANCE: N/A

RAILWAY EQUIPMENT CO.
DELANO, MINNESOTA (763) 972-2200

TITLE: TIE DUCT, 115# QUICK CHANGE

(ASSEMBLY)

DWG NO: 9528-4605

REV: A

SCALE: 1/8

DWG SIZE: B

SHEET 1 OF 1

Parts List					
ITEM	PART NUMBER	REV	UOM	QTY	DESCRIPTION
1	927600	B	EA	1	POINT/TD NOZZLE MOUNT PLATE RH
2	927701	A	EA	1	SCREEN, POINT NOZZLE
3	927702	A	EA	1	SCREEN TRACK DUCT NOZZLE LARGE
4	92757	D	EA	1	GASKET, ISO, PT NOZZLE RED
5	92759	B	EA	1	GASKET, ISO, TR NOZZLE RED
6	93617	D	EA	1	POINT NOZZLE, 4 X 4 GALV
7	2833-9015	B	EA	8	WASHER, ISOLATING NOZZLE
8	28106	"	EA	8	SPACER, .38X.625X.375 ROUND
9	2833-9014	"	EA	4	WASHER, 5/8 FLAT SAE
10	2833-8110	"	EA	8	WASHER, 3/8 FLAT
11	2833-8210	"	EA	8	WASHER, 3/8 SPLIT LOCK
12	2832-8101	"	EA	8	NUT, 3/8-16 HEX
14	R9508-4000	A	EA	1	LABEL, QUICK NOZZLE ASSY RH
15	927490	A	EA	1	NOZZLE, TRACK DUCT ASSY

REVISION HISTORY				
REV	ECO	DESCRIPTION	DATE	BY
A	06-0024	NEW PART	10/24/2006	WS

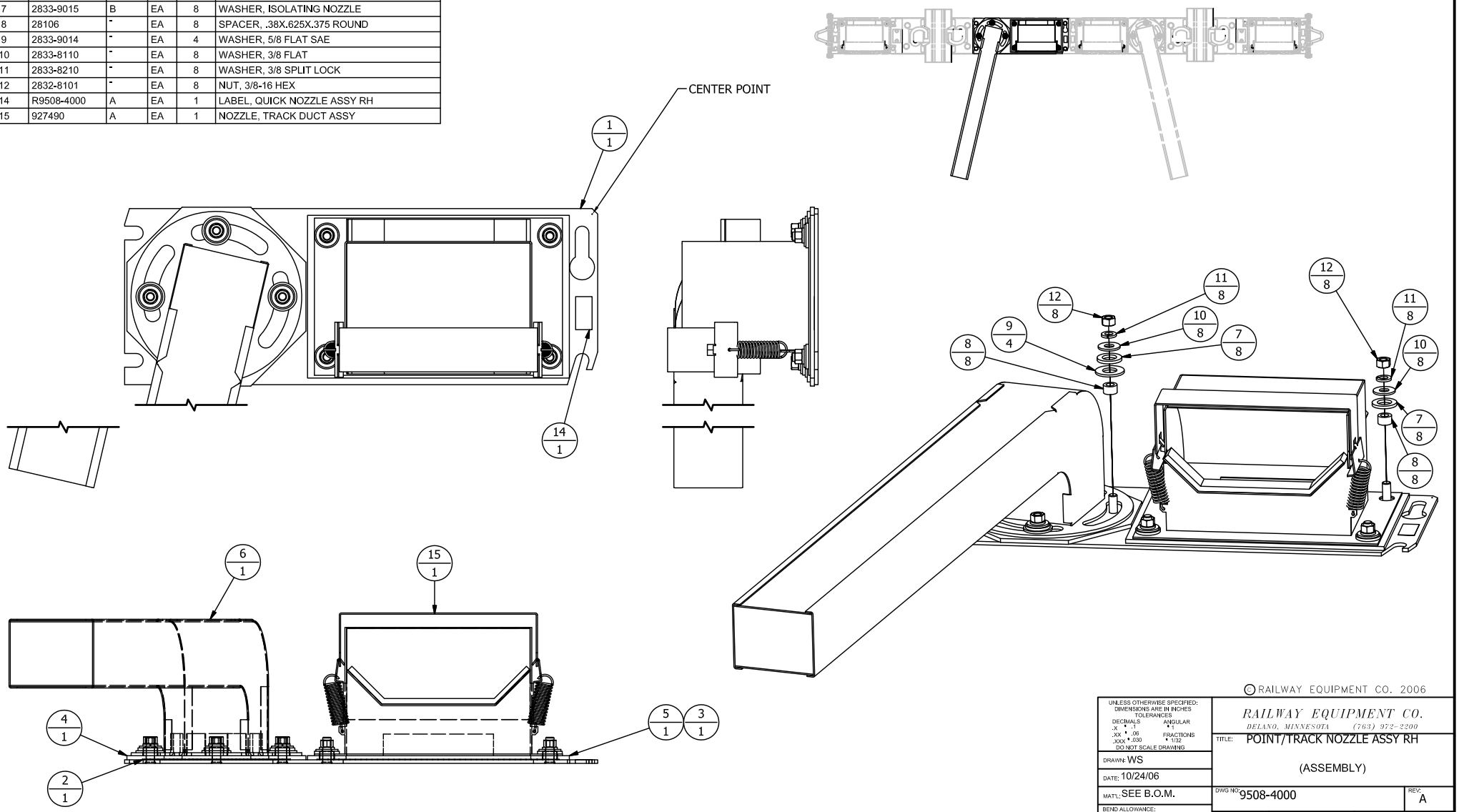

UNLESS OTHERWISE SPECIFIED: DIMENSIONS ARE IN INCHES
TOLERANCES
DECIMALS .X ± .1 .XX ± .06 .XXX ± .030
ANGULAR ± 1°
FRACTIONS ± 1/32
DO NOT SCALE DRAWING

RAILWAY EQUIPMENT CO.
DELANO, MINNESOTA (763) 972-2200

TITLE: POINT/TRACK NOZZLE ASSY RH

(ASSEMBLY)

DRAWN: WS
DATE: 10/24/06
MATL: SEE B.O.M.
BEND ALLOWANCE: N/A
DWG NO: 9508-4000
REV: A
SCALE: 1/4
DWG SIZE: B
SHEET 1 OF 1

Parts List					
ITEM	PART NUMBER	REV	UOM	QTY	DESCRIPTION
1	927606	B	EA	1	POINT/TD NOZZLE MOUNT PLATE LH
2	927701	A	EA	1	SCREEN, POINT NOZZLE
3	927702	A	EA	1	SCREEN TRACK DUCT NOZZLE LARGE
4	92757	D	EA	1	GASKET, ISO, PT NOZZLE RED
5	92759	B	EA	1	GASKET, ISO, TR NOZZLE RED
6	93617	D	EA	1	POINT NOZZLE, 4 X 4 GALV
7	2833-9015	B	EA	8	WASHER, ISOLATING NOZZLE
8	28106	-	EA	8	SPACER, .38X.625X.375 ROUND
9	2833-9014	-	EA	4	WASHER, 5/8 FLAT SAE
10	2833-8110	-	EA	8	WASHER, 3/8 FLAT
11	2833-8210	-	EA	8	WASHER, 3/8 SPLIT LOCK
12	2832-8101	-	EA	8	NUT, 3/8-16 HEX NUT
13	R9508-4001	A	EA	1	LABEL, QUICK NOZZLE ASSY LH
14	927490	A	EA	1	NOZZLE, TRACK DUCT ASSY

REVISION HISTORY				
REV	ECO	DESCRIPTION	DATE	BY
A	06-0024	NEW PART	10/19/2006	WS

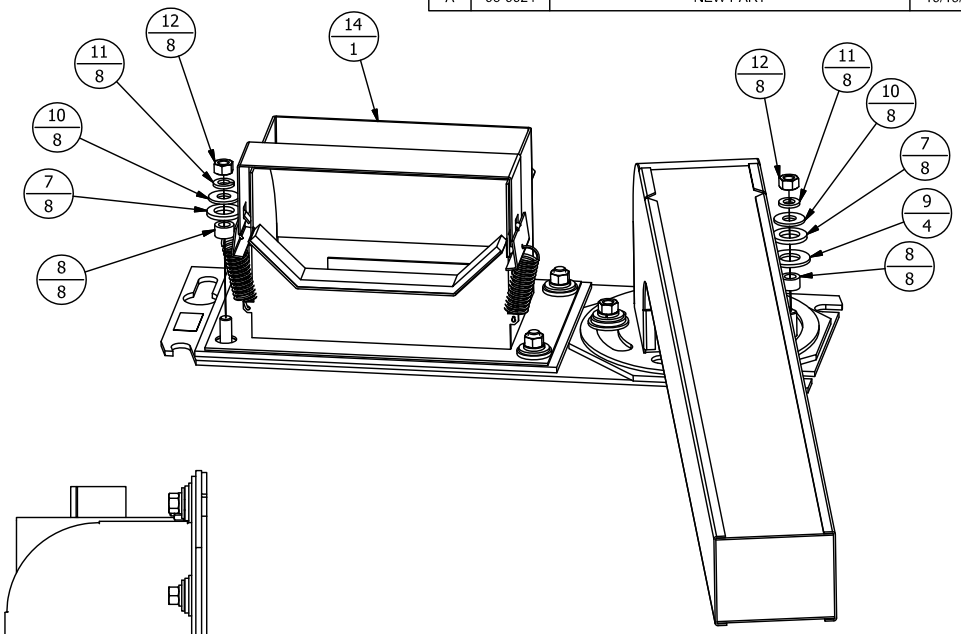

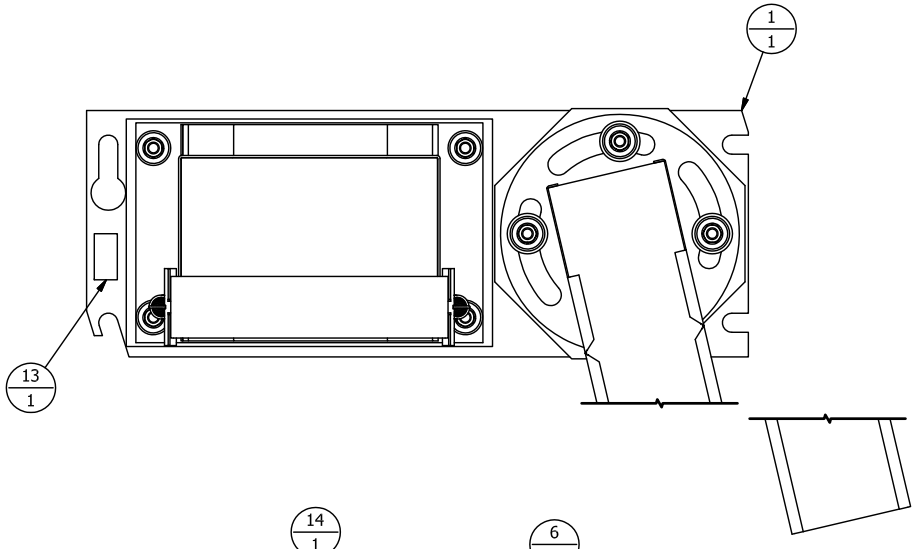

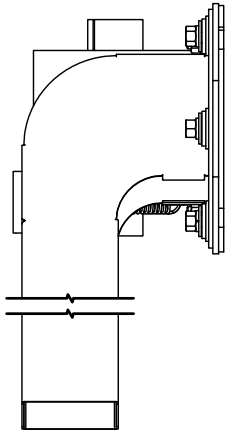

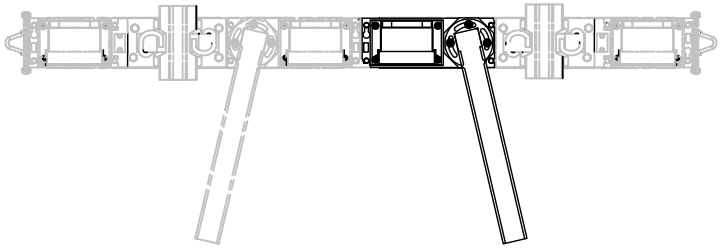

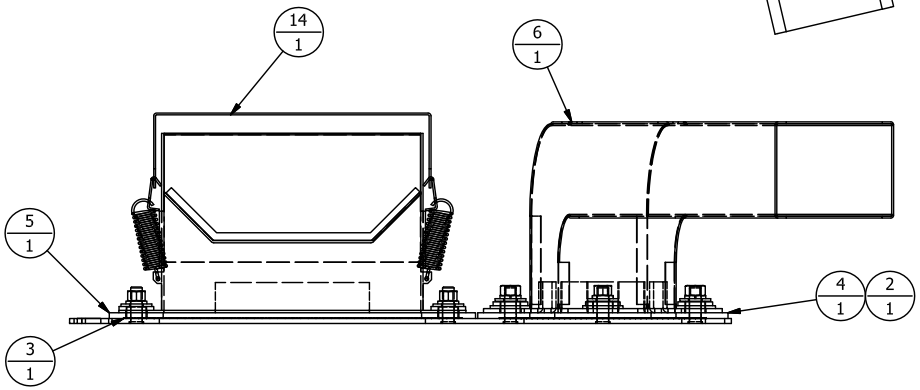

UNLESS OTHERWISE SPECIFIED:
DIMENSIONS ARE IN INCHES
TOLERANCES
DECIMALS .X ± .1 .XX ± .06 .XXX ± .030
ANGULAR ± 0
FRACTIONS ± 1/32
DO NOT SCALE DRAWING

RAILWAY EQUIPMENT CO.
DELANO, MINNESOTA (763) 972-2200

TITLE: POINT/TRACK NOZZLE ASSY LH

(ASSEMBLY)

DRAWN: WS

DATE: 10/19/06

MATL: SEE B.O.M.

BEND ALLOWANCE: N/A

DWG NO: 9508-4001

REV: A

SCALE: 1/4

DWG SIZE: B

SHEET 1 OF 1

Parts List					
ITEM	PART NUMBER	REV	UOM	QTY	DESCRIPTION
1	92759	B	EA	1	GASKET, ISO, TR NOZZLE RED
2	927702	A	EA	1	SCREEN TRACK DUCT NOZZLE LARGE
3	28106		EA	1	SPACER, .38X.625X.375 ROUND
4	2833-9015	B	EA	4	WASHER, ISOLATING NOZZLE
5	2833-8110	"	EA	4	WASHER, 3/8 FLAT
6	2833-8210	"	EA	4	WASHER, 3/8 SPLIT LOCK
7	2832-8101	"	EA	4	NUT, 3/8-16 HEX
8	927604	B	EA	1	TRACK DUCT NOZZLE MOUNT PLATE
9	60195	"	FT	1.667	GASKET, .25 X 1.0 ADHESIVE BK
10	R9508-4002	A	EA	1	LABEL, QUICK NOZZLE ASSY LH
11	927490	A	EA	1	NOZZLE, TRACK DUCT ASSY

REVISION HISTORY				
REV	ECO	DESCRIPTION	DATE	BY
A	06-0024	NEW PART	10/24/2006	WS

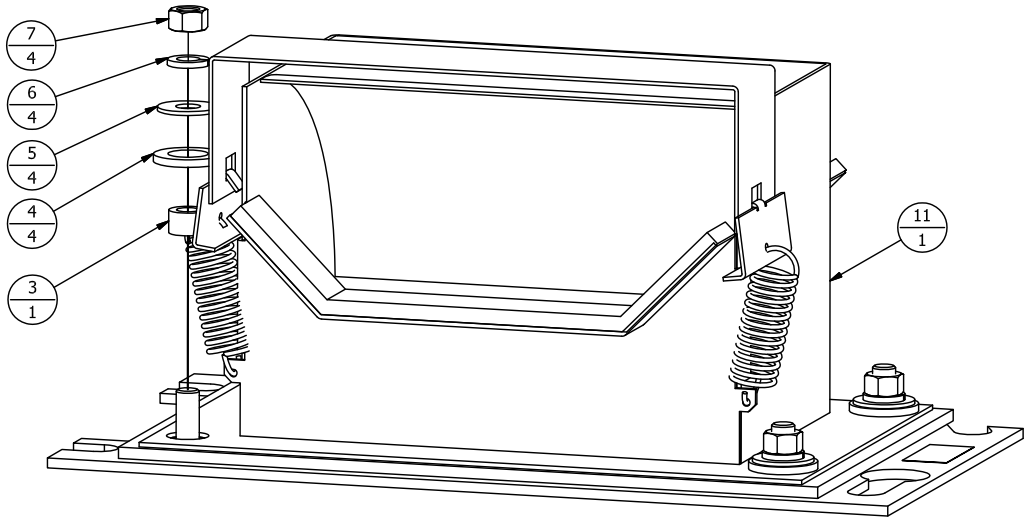

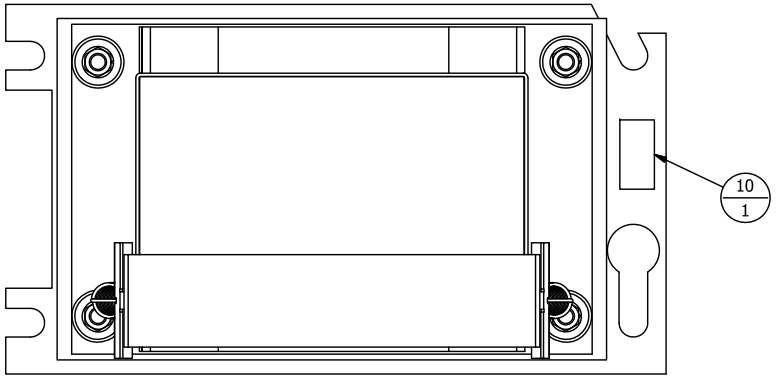

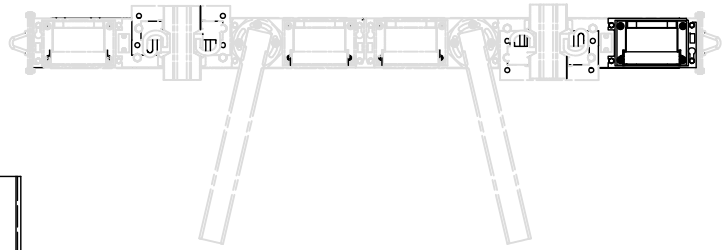

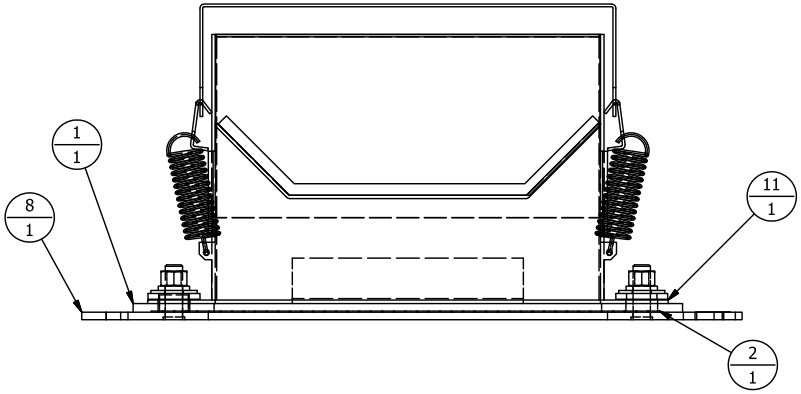

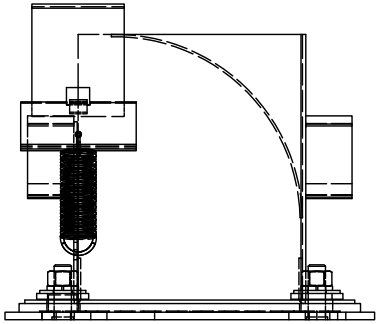

UNLESS OTHERWISE SPECIFIED:
DIMENSIONS ARE IN INCHES
TOLERANCES
DECIMALS ANGULAR
.X ± .1 ± 1°
.XX ± .06 FRACTIONS
.XXX ± .030 ± 1/32
DO NOT SCALE DRAWING

DRAWN: WS

DATE: 10/24/06

MAT'L: SEE B.O.M.

BEND ALLOWANCE: N/A

RAILWAY EQUIPMENT CO.
DELANO, MINNESOTA (763) 972-2200

TITLE: OUTSIDE TRACK NOZZLE ASSY LH

(ASSEMBLY)

DWG NO: 9508-4002

REV: A

SCALE: 3/8 DWG SIZE: B SHEET 1 OF 1

Parts List					
ITEM	PART NUMBER	REV	UOM	QTY	DESCRIPTION
1	92759	B	EA	1	GASKET, ISO, TR NOZZLE RED
2	927702	A	EA	1	SCREEN TRACK DUCT NOZZLE LARGE
3	28106	-	EA	1	SPACER, .38X.625X.375 ROUND
4	2833-9015	B	EA	4	WASHER, ISOLATING NOZZLE
5	2833-8110	-	EA	4	WASHER, 3/8 FLAT
6	2833-8210	-	EA	4	WASHER, 3/8 SPLIT LOCK
7	2832-8101	-	EA	4	NUT, 3/8-16 HEX
8	927604	B	EA	1	TRACK DUCT NOZZLE MOUNT PLATE
9	60195	-	FT	1.67	GASKET, .25 X 1.0 ADHESIVE BK
10	R9508-4003	A	EA	1	LABEL, QUICK NOZZLE ASSY RH
11	927490	A	EA	1	NOZZLE, TRACK DUCT ASSY

REVISION HISTORY				
REV	ECO	DESCRIPTION	DATE	BY
A	06-0024	NEW PART	10/19/2006	WS

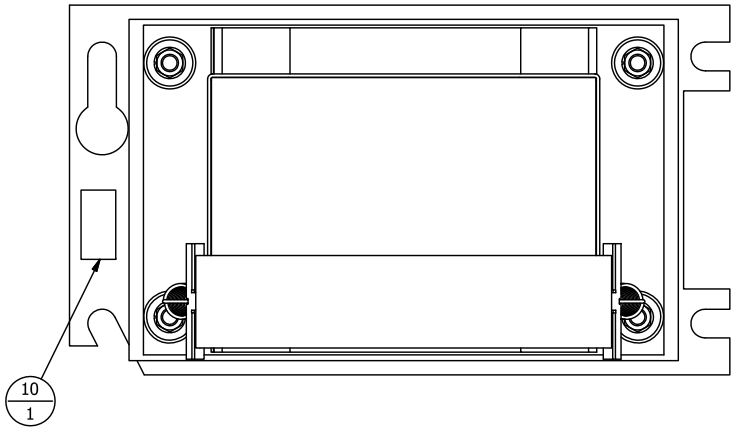

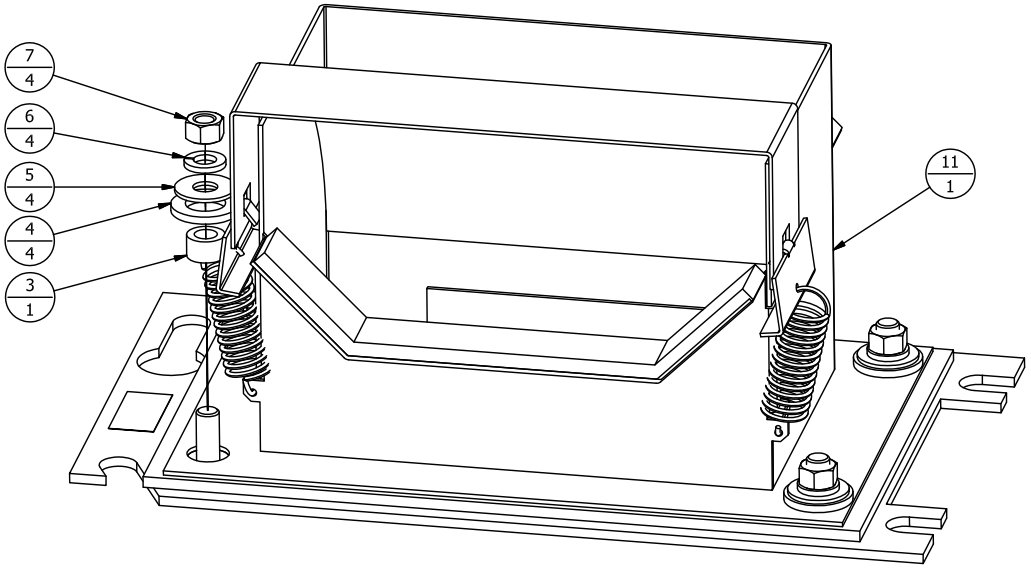

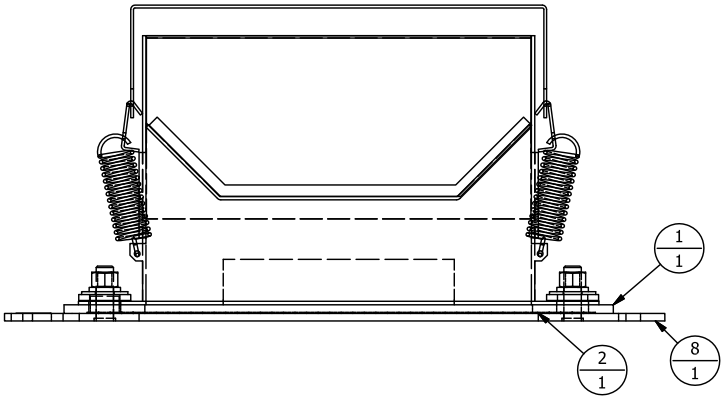

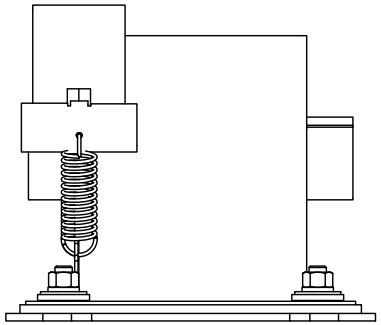

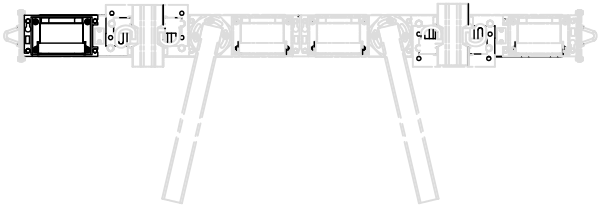

UNLESS OTHERWISE SPECIFIED:
DIMENSIONS ARE IN INCHES
TOLERANCES
DECIMALS ANGULAR
.X ± .1 ± 1°
.XX ± .06 FRACTIONS
.XXX ± .03 ± 1/32
DO NOT SCALE DRAWING

RAILWAY EQUIPMENT CO.
DELANO, MINNESOTA (763) 972-2200

TITLE: OUTSIDE TRACK NOZZLE ASSY RH

(ASSEMBLY)

DRAWN: WS

DATE: 10/19/06

MAT'L: SEE B.O.M.

BEND ALLOWANCE: N/A

DWG NO: 9508-4003

REV: A

SCALE: 3/8

DWG SIZE: B

SHEET 1 OF 1

Parts List					
ITEM	PART NUMBER			QTY	DESCRIPTION
1	927488	A	EA	1	NOZZLE, TRACK DUCT, NO DAMPER
2	92745	A	EA	1	HOLDDOWN STRAP, T. DUCT
5	92742	B	EA	2	SPRING, TRACK DUCT SUPPORT
4	92743	B	EA	2	CLIP, HOLDDOWN SPRING
7	60195	-	IN	20	GASKET, .25 X 1.0 ADHESIVE BK

REVISION HISTORY				
REV	ECO	DESCRIPTION	DATE	BY
A	06-0028	NEW PART	11/30/2006	RMJ

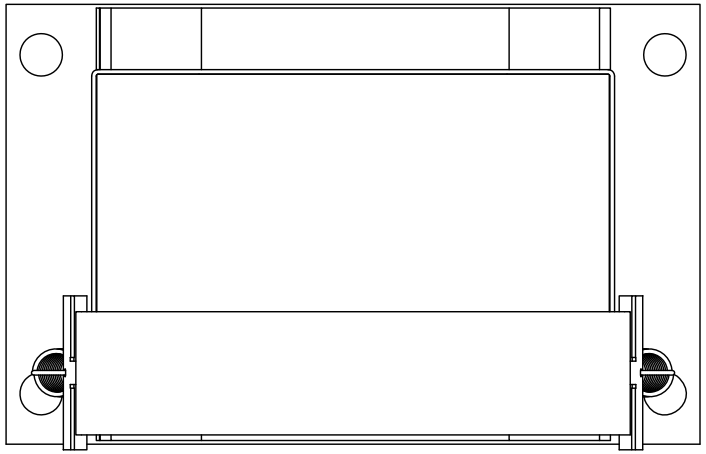

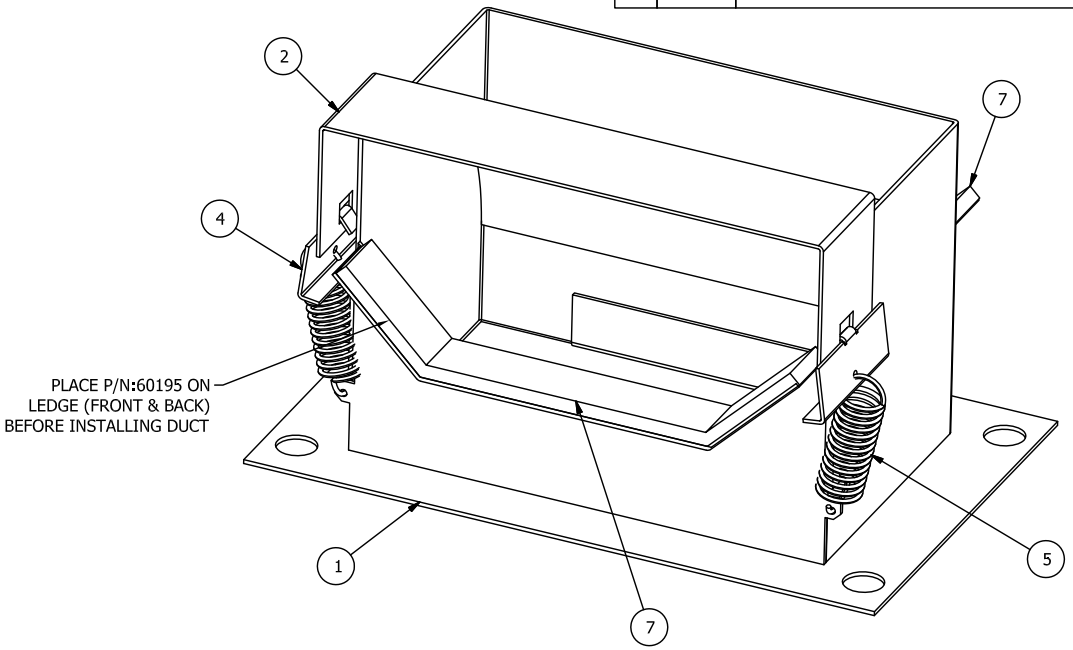

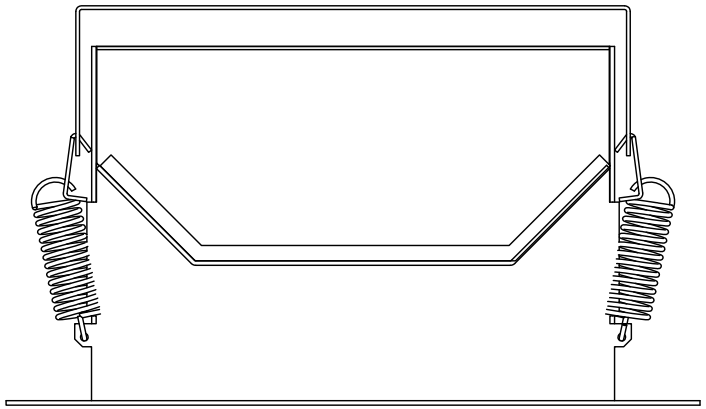

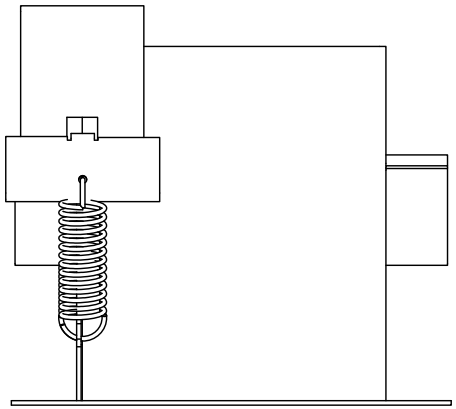

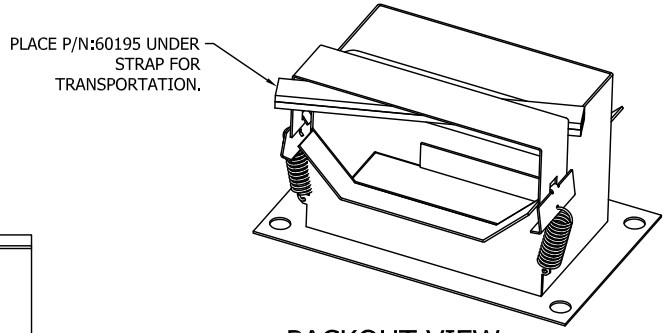

PACKOUT VIEW
SCALE 1 / 4

UNLESS OTHERWISE SPECIFIED:
DIMENSIONS ARE IN INCHES
TOLERANCES
DECIMALS .X ± 0.1, .XX ± 0.02, .XXX ± 0.01
ANGULAR ± 1°
FRACTIONS ± 1/32
DO NOT SCALE DRAWING

RAILWAY EQUIPMENT CO.
DELANO, MINNESOTA (763) 972-2200

TITLE: NOZZLE, TRACK DUCT ASSY

DRAWN: RMJ

DATE: 11/30/06

MAT'L: N/A

BEND ALLOWANCE: N/A

DWG NO: 927490

REV: A

SCALE: 1/2

DWG SIZE: B

SHEET 1 OF 1

ITEM NO.	PART NO.	UOM	QTY	DESCRIPTION
1	2831851114	EA	4	BOLT, HEX HD 3/8–16 x 1" SS
2	2833–8110	EA	4	WASHER, PLAIN 3/8"
3	2833–9015B	EA	4	WASHER, INSULATOR
4	28106	EA	4	SPACER, ROUND, .38 X .625 X .375
5	92757D	EA	1	GASKET, POINT NOZZLE
6	2833–9014	EA	4	WASHER, 5/8 FLAT PLATED
7	14046	EA	1	BAG, ZIPTOP 9x12 4ml
8	2833–8210	EA	4	WASHER, SPLIT LOCK 3/8"
9	927701A	EA	1	SCREEN, POINT NOZZLE

SYM.	E.C.O.	BY	REVISION DESCRIPTION	DATE	APPROVED
B	--- ---	TB	ADD 927701	10/19/00	---
C	06–0028	RJ	CORNERS CUT OFF ON DUCT	11/29/06	---

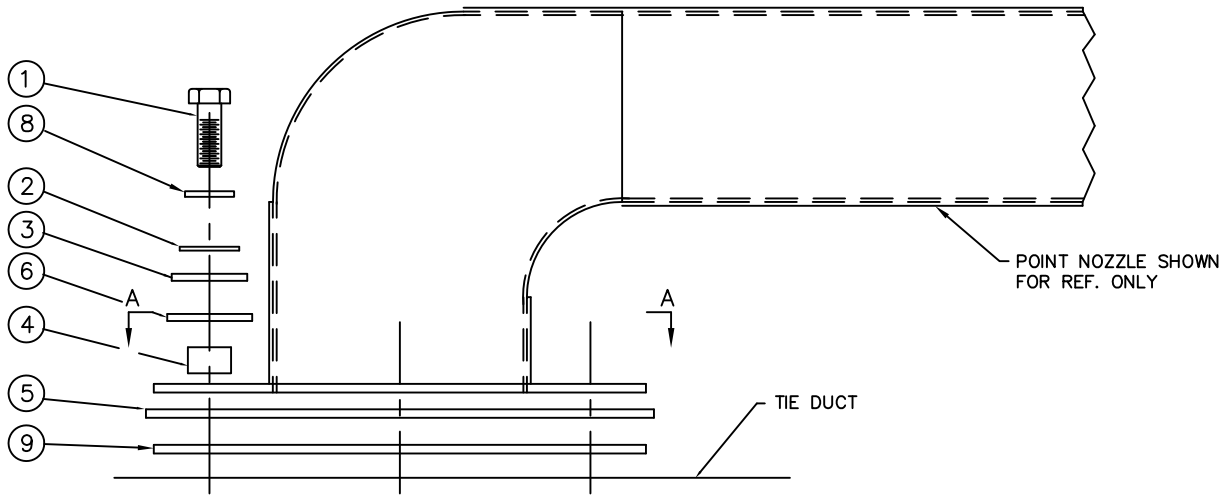

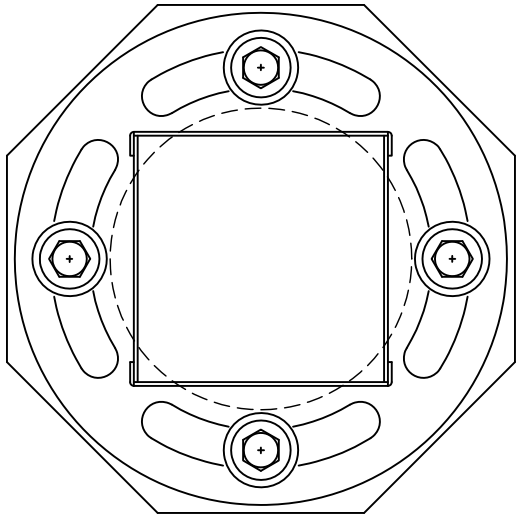

SECTION A–A

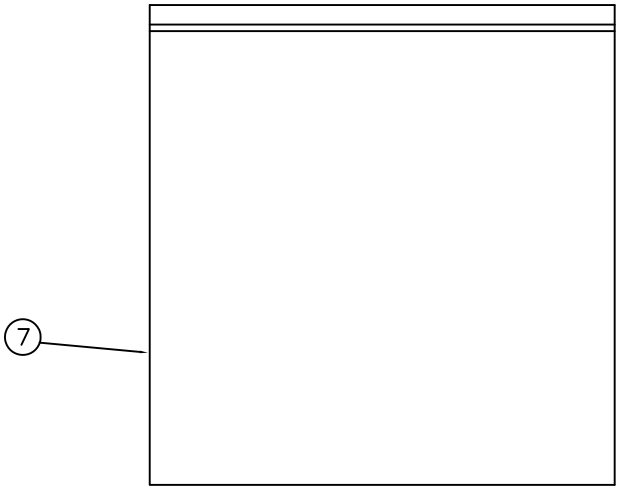

UNLESS OTHERWISE SPECIFIED: DIMENSIONS ARE IN INCHES
TOLERANCES
DECIMALS .X ± .035 .XX ± .010 .XXX ± .005
ANGULAR ± 0.5°
FRACTIONS ± 1/32
DO NOT SCALE DRAWING

DRAWN EFK

DATE 04/11/97

MATERIAL N/A

BE & BEND ALLOWANCE N/A

RAILWAY EQUIPMENT CO.
DELANO, MINNESOTA (763) 972–2200

TITLE
ISOLATION KIT ASSEMBLY
POINT NOZZLE
TIE DUCT

DWG NO. 9278–0021 REV C

SCALE 1/4 DRAWING SIZE B SHEET 1 OF 1

ITEM NO.	PART NO.	UOM	QTY	DESCRIPTION
1	2831851114	EA	4	BOLT, HEX 3/8-16 x 1" SS
2	2833-8110	EA	4	WASHER, PLAIN 3/8"
3	2833-9015	EA	4	WASHER, INSULATOR
4	28106	EA	4	SPACER, ROUND, .38 X .625 X .375
5	92759	EA	1	GASKET, TRACK DUCT NOZZLE
6	60195	FT	1.67	GASKET, ADHESIVE .25 x 1"
7	14045	EA	1	BAG, ZIPTOP 12 x 15 4ml
8	2833-8210	EA	4	WASHER, SPLIT LOCK 3/8"
9	927702	EA	1	SCREEN, TRACK DUCT NOZZLE

SYM.	E.C.O.	BY	REVISION DESCRIPTION	DATE	APPROVED
A	00-0005	TB	NEW PART	12.29.00	

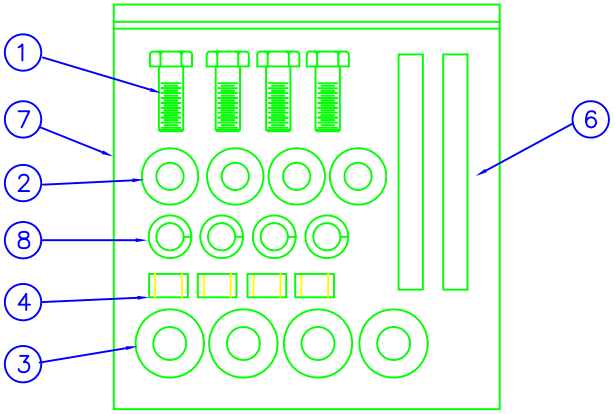

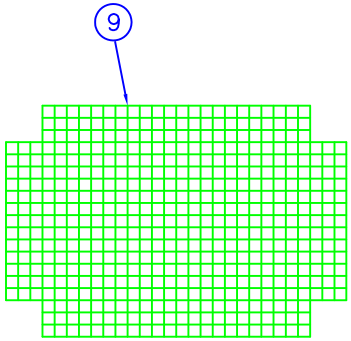

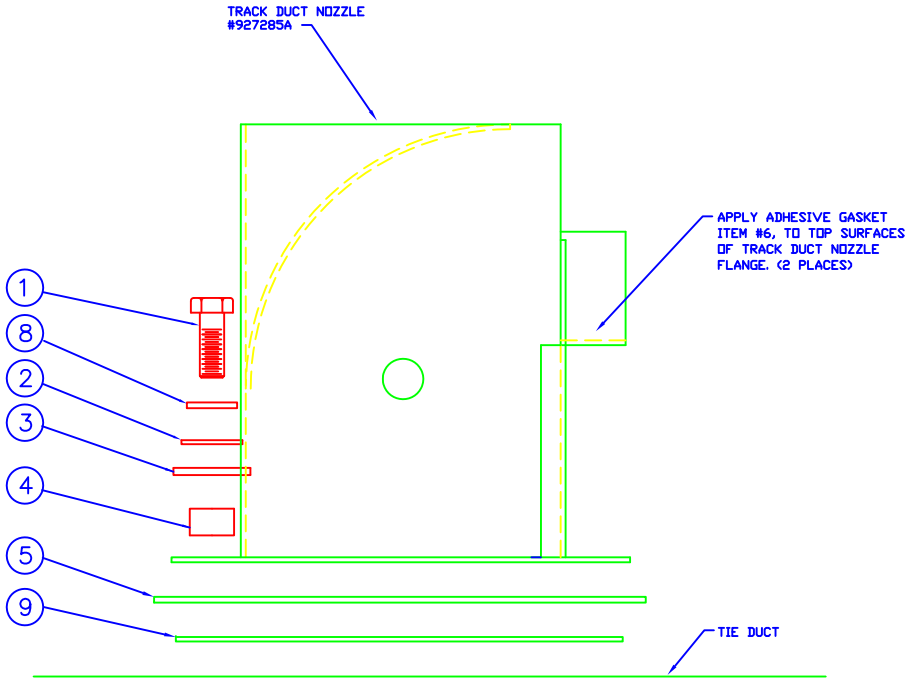

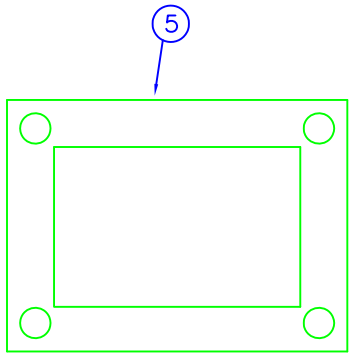

FORMED HOLES
"D" INDICATES FORMED INTO DRAWING
"U" INDICATES FORMED UP FROM DRAWING

REF.SCHEMATIC NO.

REF.CONNECTION DIA.

CAD NO. | MADE FROM

UNLESS OTHERWISE SPECIFIED
ALL BENDS ARE 90°
ALL BENDS HAVE MIN. RADIUS
DIMENSIONS ARE IN INCHES
TOLERANCE ON

FRACTIONS	DECIMALS	ANGLES
± 1/32	.xx±.03 .xxx±.010 .xxxx±.005	±1.00°

MATERIAL

FINISH

DRAWN BY: T. BUHL | DATE: 12.19.00
CHECKED BY | DATE
APPROVED BY | DATE
SHEET 1 OF 1

RAILWAY EQUIPMENT CO.
DELANO, MINNESOTA (763) 972-2200

TITLE: ASS'Y, ISO KIT TRACK NOZZLE TIE DUCT

DWG NO. 9278-0027 | REV. A

ITEM NO.	PART NO.	UOM	QTY	DESCRIPTION
1	952226	EA	1	INSUL COVER, OFFSET DUCT
2	29019	EA	8	SHOULDER BOLT 1/4-20 X 1.3
3	952224	EA	1	DUCT, OFFSET, WITH HEAVY BASE
4	32002	SQ.FT.	6	INSULATION FIBERGLASS
5	9528-0074	EA	1	GASKET KIT, 9X9 5HP FLEX
6	6093-0102	EA	1	TY-RAP
7	952238	EA	1	MIXER, AIRFLOW 9X9 OFFSET WLDM
8	93625	EA	1	GASKET, 9 X 9 LIFT-OUT
9	2831851116	EA	2	BOLT, 3/8-16 X 1, HEX HEAD
10	2832-8904	EA	2	NUT, 3/8-16 CENTERLOCK

SYM.	E.C.O.	BY	REVISION DESCRIPTION	DATE	APPROVED
A	05-0008	RF	NEW PART	02/28/05	---
-	---	--	---	---	---

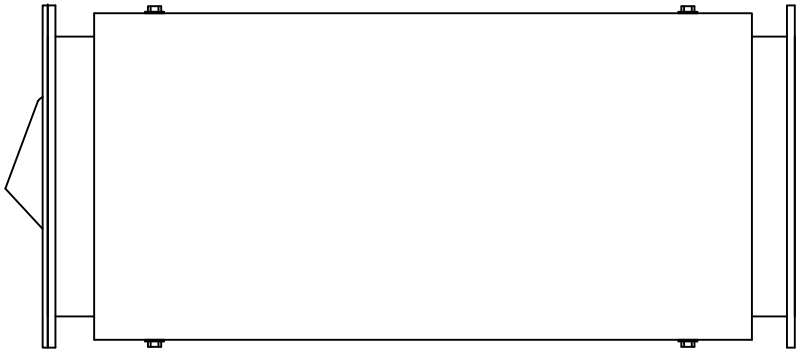

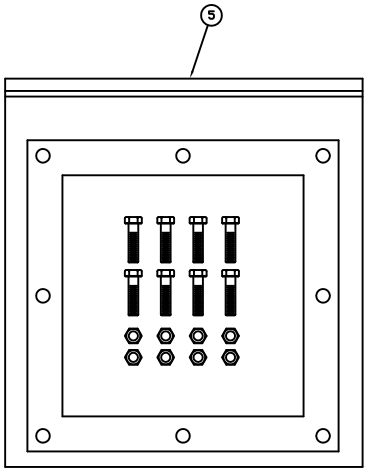

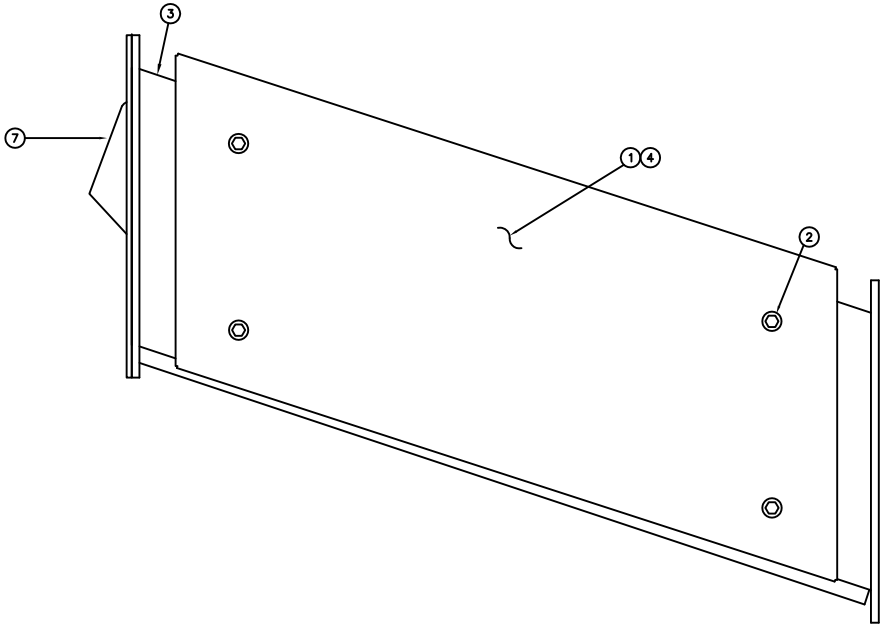

UNLESS OTHERWISE SPECIFIED: DIMENSIONS ARE IN INCHES
TOLERANCES
DECIMALS .X ± .035 .XX ± .010 .XXX ± .005
ANGULAR ± 0.5°
FRACTIONS ± 1/32
DO NOT SCALE DRAWING

RAILWAY EQUIPMENT CO.
DELANO, MINNESOTA (763) 972-2200

TITLE: OFFSET DUCT, 2', W/MIXER REINFORCED, LIFTOUT ASSEMBLY / B.O.M.

DRAWN: RPF
DATE: 02/28/05
MATERIAL: N/A
DIE & BEND ALLOWANCE: N/A
DWG NO.: 9528-3402
REV: A
SCALE: 1/4
DRAWING SIZE: B
SHEET 1 OF 1

ITEM NO.	PART NO.	UOM	QTY	DESCRIPTION
1	9528-0074	EA	1	GASKET KIT, 9X9 5HP FLEX
2	952709	EA	1	DUCT, FLEX, 2' STRAIGHT
3	6093-0102	EA	1	TY-RAP
4	32002	SQF	8	INSULATION, FIBERGLASS
5	952244	EA	1	FLEX WRAP, TOP 2 FOOT
6	952245	EA	1	FLEX WRAP, BOTTOM 2'
7	29051	EA	6	BOLT, 1/4-20 X 1/2 WITH 1/2 HD

SYM.	E.C.O.	BY	REVISION DESCRIPTION	DATE	APPROVED
A	03-0066	JK	NEW PART	10/21/03	---

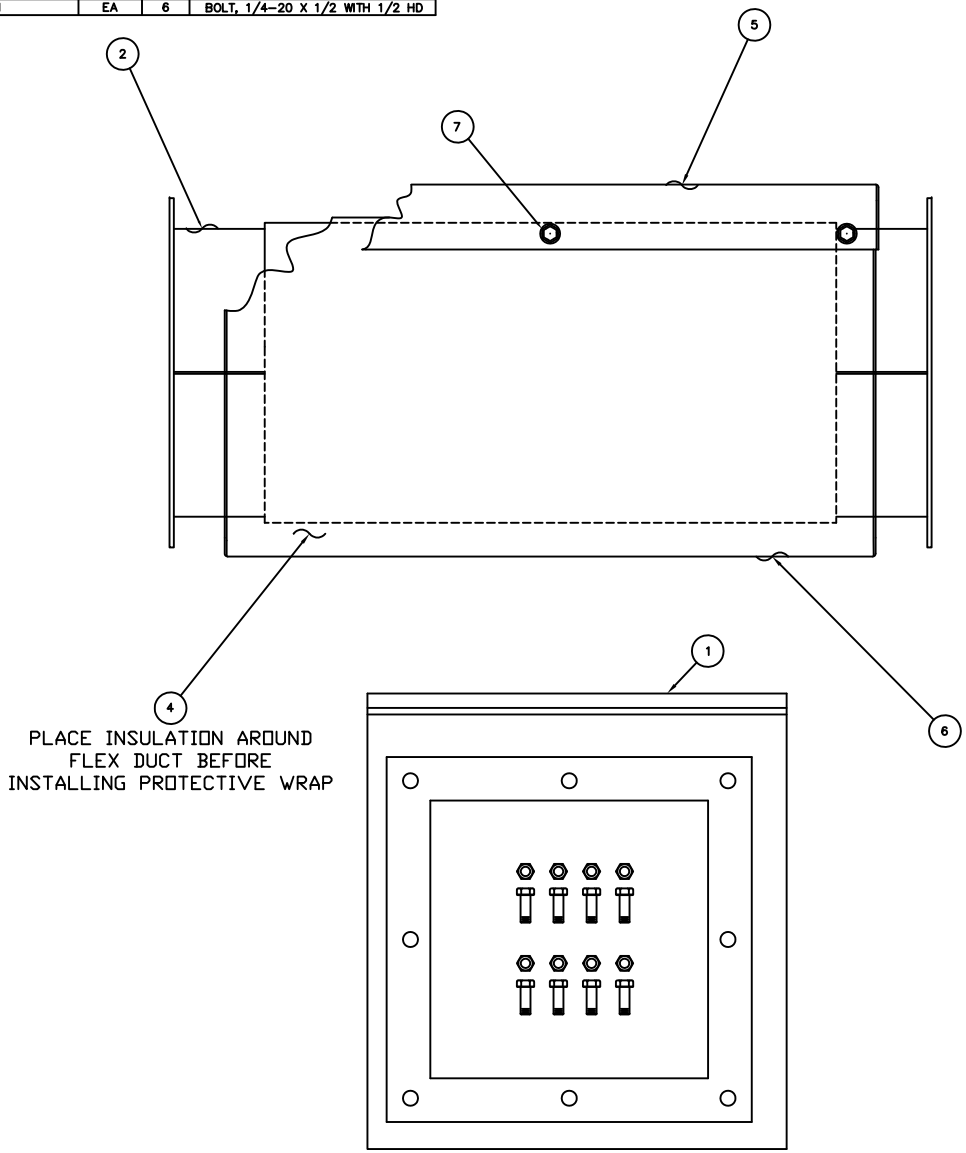

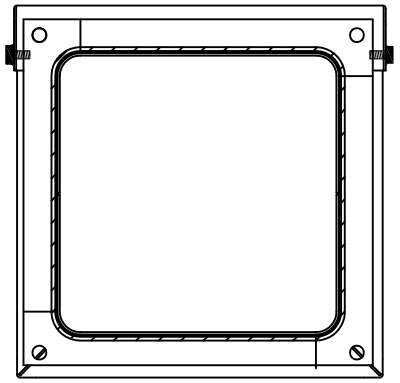

UNLESS OTHERWISE SPECIFIED:
DIMENSIONS ARE IN INCHES
TOLERANCES
DECIMALS .X ± .035 .XX ± .010 .XXX ± .005
ANGULAR ± 0.5°
FRACTIONS ± 1/32
DO NOT SCALE DRAWING

DRAWN JKK

DATE 10/21/03

MATERIAL N/A

BE & BEND ALLOWANCE N/A

RAILWAY EQUIPMENT CO.
DELANO, MINNESOTA (763) 972-2200

TITLE DUCT, FLEX, INSULATED
2' STRAIGHT
(ASSEMBLY)

DWG NO. 9528-4220

REV A

SCALE 1/4 DRAWING SIZE B SHEET 1 OF 1

ITEM NO.	PART NO.	UOM	QTY	DESCRIPTION
1	927443	EA	1	TRACK DUCT BASE 5'
2	92740	EA	1	END PLATE, TRACK DUCT
3	92730	EA	1	TRACK DUCT COVER 5'
4	92774	EA	1	TRACK DUCT SUPPORT BRACKET
5	92785	EA	1	DEFLECTOR, TRACK DUCT, SMALL
6	29051	EA	9	BOLT, 1/4-20X1/2 W1/2" HEX HEAD
7	6093-0100	EA	1	TY-RAP, 4" .10 WIDTH

SYM.	E.C.O.	BY	REVISION DESCRIPTION	DATE	APPROVED
A	05-0017	RF	NEW SPLICE SYSTEM	05/24/05	---
B	05-0047	RO	NEW SUPPORT ASSEM DESIGN	10/27/05	---

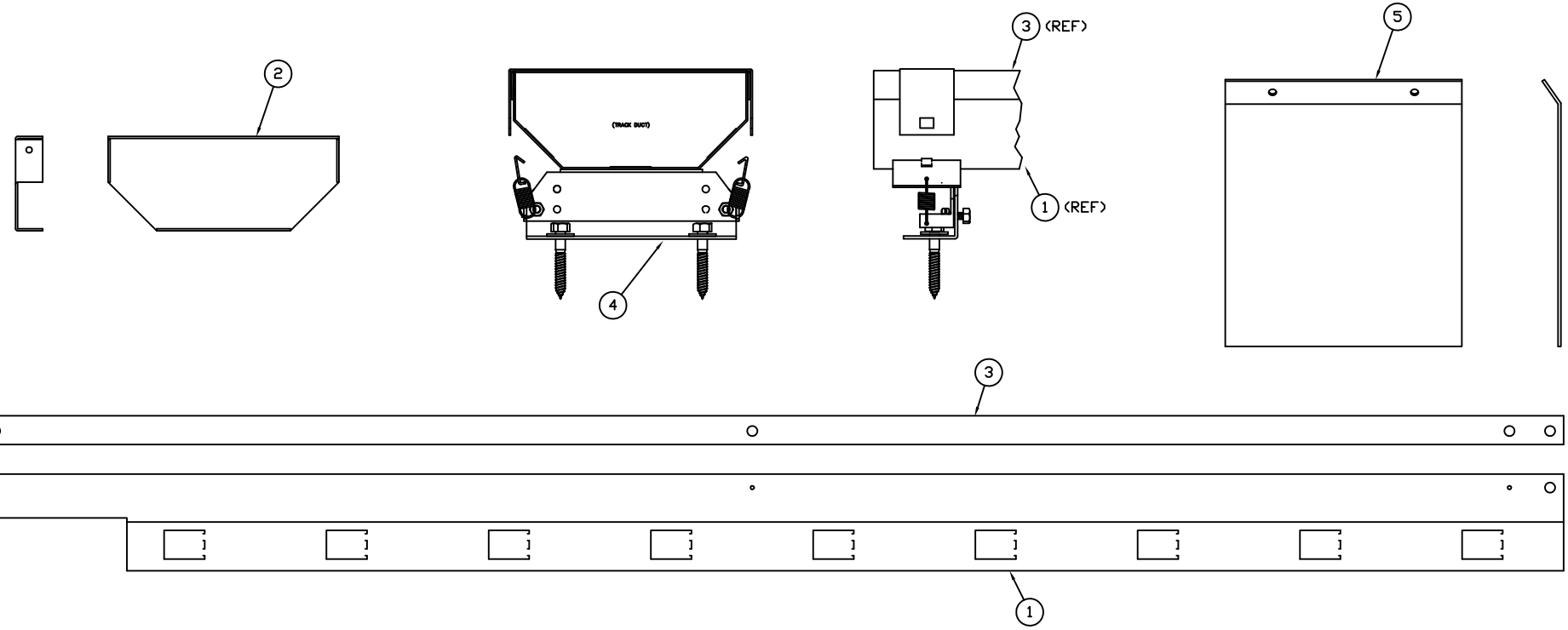

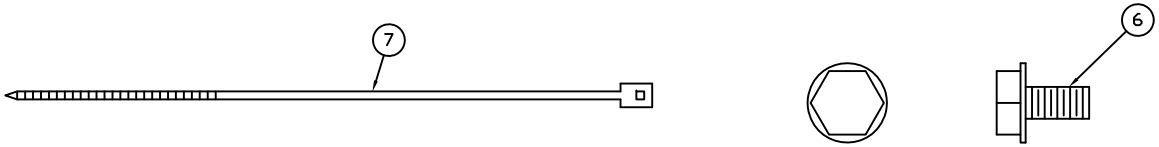

FULL SCALE

UNLESS OTHERWISE SPECIFIED: DIMENSIONS ARE IN INCHES
TOLERANCES
DECIMALS .X ± .035 .XX ± .010 .XXX ± .005
ANGULAR ± 0.5°
FRACTIONS ± 1/32
DO NOT SCALE DRAWING

DRAWN RPF

DATE 05/24/05

MATERIAL SEE PRINT

BE & BEND ALLOWANCE N/A

RAILWAY EQUIPMENT CO.
DELANO, MINNESOTA (763) 972-2200

TITLE
TRACK DUCT
5' POINT LTD
ASSEMBLY / B.O.M.

DWG NO. 9278-0226

REV B

SCALE 1/4 DRAWING SIZE B SHEET 1 OF 1

ITEM NO.	PART NO.	UOM	QTY	DESCRIPTION
1	92735	EA	1	TRACK DUCT BASE 5'
2	92730	EA	1	TRACK DUCT COVER 5'
3	927441	EA	1	CENTER COVER, E.Z. SPLICE
4	927442	EA	2	END COVER, E.Z. SPLICE
5	927450	EA	1	BASE, E.Z. SPLICE
6	92774	EA	1	TRACK DUCT SUPPORT BRACKET
7	29051	EA	6	BOLT, 1/4-20X1/2 W1/2" HEX HEAD
8	6093-0100	EA	1	TY-RAP, 4" .10 WIDTH

SYM.	E.C.O.	BY	REVISION DESCRIPTION	DATE	APPROVED
A	05-0017	RF	NEW SPLICE SYSTEM	05/24/05	---
B	05-0047	RO	NEW SUPPORT ASSM DESIGN	10/27/05	---

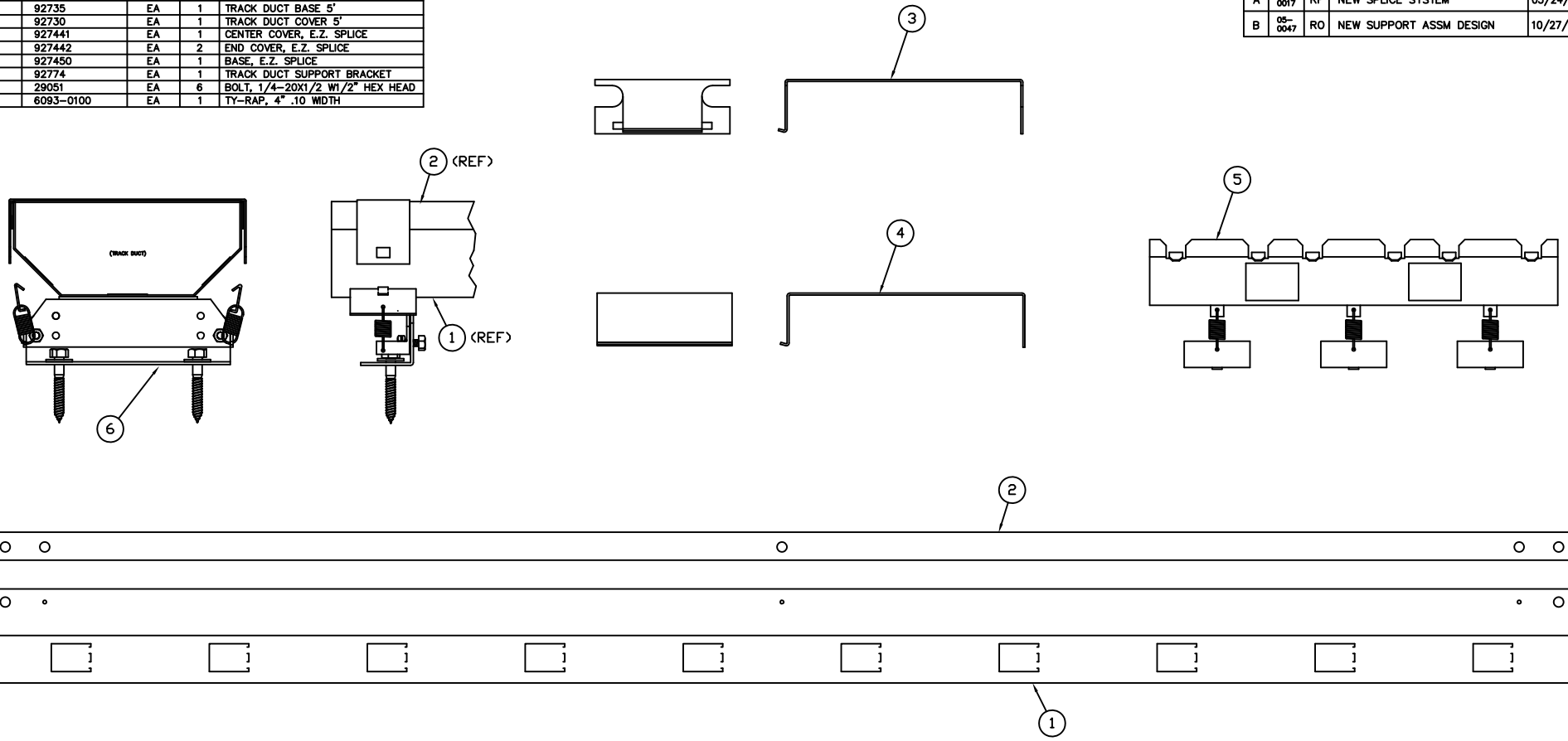

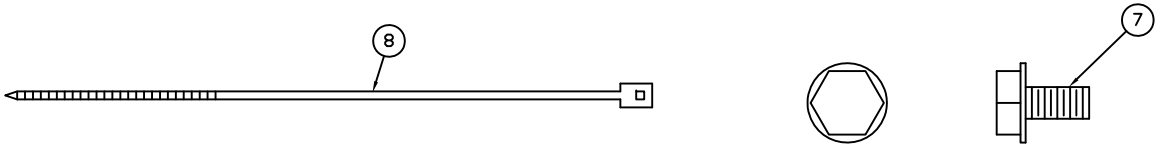

FULL SCALE

UNLESS OTHERWISE SPECIFIED: DIMENSIONS ARE IN INCHES
TOLERANCES
DECIMALS .X ± .035 .XX ± .010 .XXX ± .005
ANGULAR ± 0.5°
FRACTIONS ± 1/32
DO NOT SCALE DRAWING

DRAWN RPF
DATE 05/24/05
MATERIAL SEE PRINT
BE & BEND ALLOWANCE N/A

RAILWAY EQUIPMENT CO.
DELANO, MINNESOTA (763) 972-2200

TITLE
TRACK DUCT
5' MID
ASSEMBLY / B.O.M.

DWG NO. 9278-0227
REV B
SCALE 1/4
DRAWING SIZE B
SHEET 1 OF 1

ITEM NO.	PART NO.	UOM	QTY	DESCRIPTION
1	927538	EA	1	TRACK DUCT BASE 10'
2	92741	EA	1	TRACK DUCT COVER 10'
3	927441	EA	1	CENTER COVER, E.Z. SPLICE
4	927442	EA	2	END COVER, E.Z. SPLICE
5	927450	EA	1	BASE, E.Z. SPLICE
6	92774	EA	1	TRACK DUCT SUPPORT BRACKET
7	29051	EA	6	BOLT, 1/4-20X1/2 W1/2" HEX HEAD
8	6093-0100	EA	1	TY-RAP, 4" .10 WIDTH

SYM.	E.C.O.	BY	REVISION DESCRIPTION	DATE	APPROVED
J	--- ---	TB	REMOVE 92744, 28080, 28081	05/26/99	---
K	02-0045	RF	REPLACE 29016 W/29051	08/29/02	---
L	05-0017	RF	NEW SPLICE SYSTEM	05/18/05	---
M	05-0047	RO	NEW SUPPORT ASSEM. DESIGN	10/27/05	---

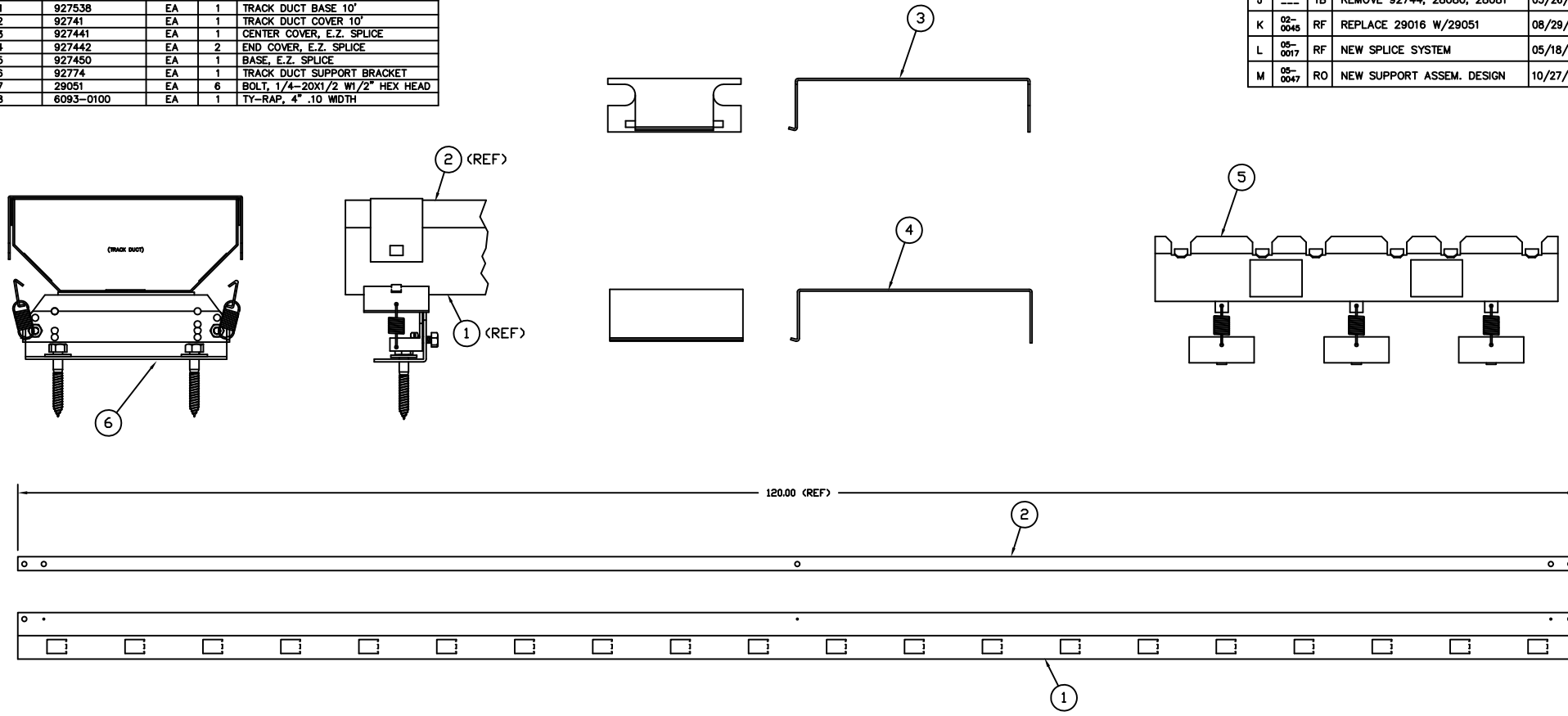

1/8 SCALE

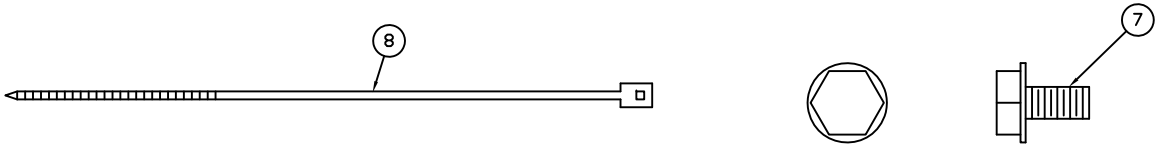

FULL SCALE

UNLESS OTHERWISE SPECIFIED: DIMENSIONS ARE IN INCHES
TOLERANCES
DECIMALS .X ± .035 .XX ± .010 .XXX ± .005
ANGULAR ± 0.5°
FRACTIONS ± 1/32
DO NOT SCALE DRAWING

DRAWN RPF

DATE 02/15/93

MATERIAL SEE PRINT

BE & BEND ALLOWANCE N/A

RAILWAY EQUIPMENT CO.
DELANO, MINNESOTA (763) 972-2200

TITLE
TRACK DUCT
10' MID
ASSEMBLY / B.O.M.

DWG NO. 9278-1201

REV M

SCALE 1/4 DRAWING SIZE B SHEET 1 OF 1

ITEM NO.	PART NO.	UOM	QTY	DESCRIPTION
1	927538	EA	1	TRACK DUCT BASE 10'
2	92740	EA	1	END PLATE, TRACK DUCT
3	92741	EA	1	TRACK DUCT COVER 10'
4	927441	EA	1	CENTER COVER, E.Z. SPLICE
5	927442	EA	2	END COVER, E.Z. SPLICE
6	927450	EA	1	BASE, E.Z. SPLICE
7	92774	EA	1	TRACK DUCT SUPPORT BRACKET
8	92785	EA	1	DEFLECTOR, TRACK DUCT, SMALL
9	29051	EA	9	BOLT, 1/4-20X1/2 W1/2" HEX HEAD
10	6093-0100	EA	1	TY-RAP, 4" .10 WIDTH

SYM.	E.C.O.	BY	REVISION DESCRIPTION	DATE	APPROVED
J	--- ---	TB	UPDATE TRACK DUCT SUPPORT	05/26/99	---
K	02-0045	RF	REPLACE 29016 W/29051	08/29/02	---
L	05-0017	RF	NEW SPLICE SYSTEM	05/18/05	---
M	05-0047	RO	NEW SUPPORT ASSM DESIGN	10/27/05	---

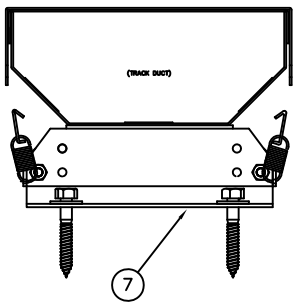

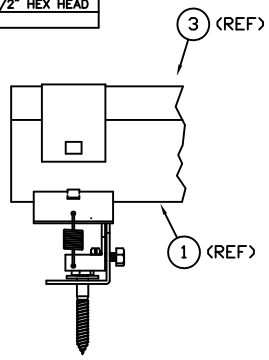

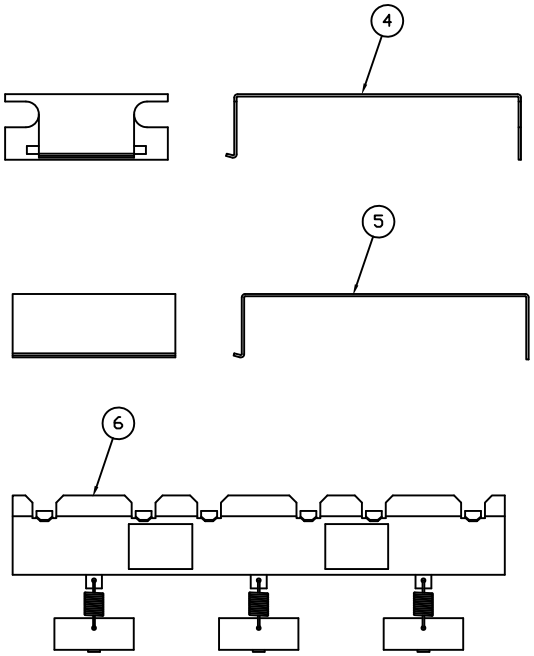

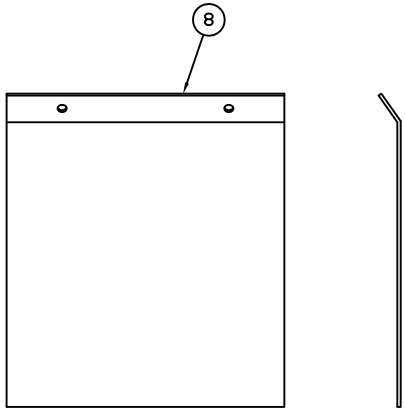

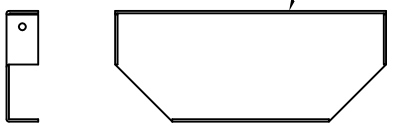

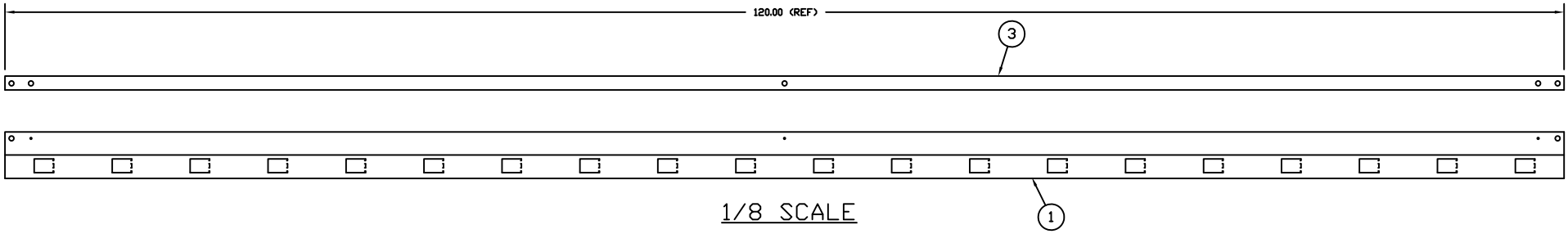

1/8 SCALE

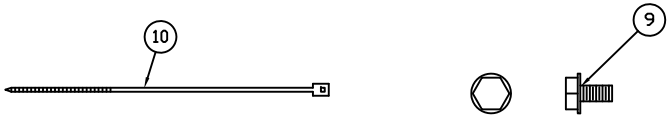

1/2 SCALE

UNLESS OTHERWISE SPECIFIED: DIMENSIONS ARE IN INCHES
TOLERANCES
DECIMALS .X ± .035 .XX ± .010 .XXX ± .005
ANGULAR ± 0.5°
FRACTIONS ± 1/32
DO NOT SCALE DRAWING

DRAWN RPF

DATE 02/15/93

MATERIAL SEE PRINT

DIE & BEND ALLOWANCE N/A

RAILWAY EQUIPMENT CO.
DELANO, MINNESOTA (763) 972-2200

TITLE
TRACK DUCT
10' HEEL
ASSEMBLY / B.O.M.

DWG NO. 9278-1202

REV M

SCALE 1/4 DRAWING SIZE B SHEET 1 OF 1

ITEM NO.	PART NO.	UOM	QTY	DESCRIPTION
1	9278–0207	EA	1	TRACK DUCT 7' HEEL
2	9278–0027	EA	1	ISO KIT, TR NOZZLE LARGE
3	927490	EA	1	NOZZLE, TRACK DUCT
4	41023	EA	1	BOX, TRACK DUCT KIT

SYM.	E.C.O.	BY	REVISION DESCRIPTION	DATE	APPROVED
A	02–0027	RF	NEW PART	07/03/02	---
B	03–0023	RF	UPDATE NOZZLE	07/29/03	---
C	05–0017	RF	NEW SPLICE DESIGN	05/25/05	---
D	05–0047	RO	NEW TRACK DUCT NOZZLE	11/10/05	---
E	06–0024	RJ	NEW TRACK DUCT NOZZLE	02/02/07	---

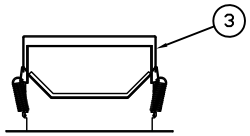

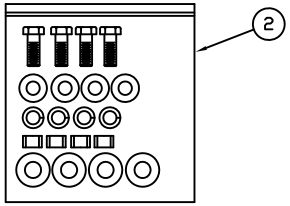

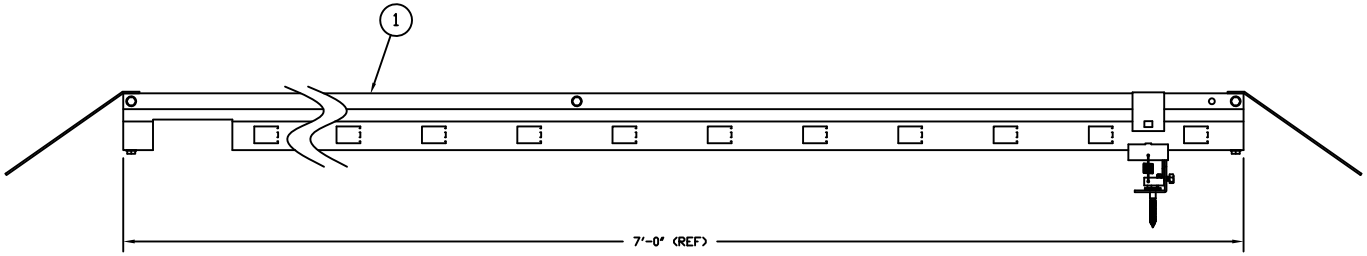

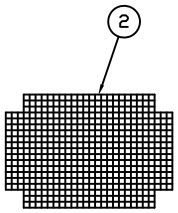

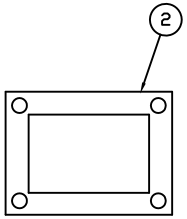

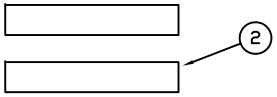

UNLESS OTHERWISE SPECIFIED:
DIMENSIONS ARE IN INCHES
TOLERANCES
DECIMALS ANGULAR
.X ± .035 ± 0.5°
.XX ± .010 FRACTIONS
.XXX ± .005 ± 1/32
DO NOT SCALE DRAWING

RAILWAY EQUIPMENT CO.
DELANO, MINNESOTA (763) 972–2200

TITLE
TRACK DUCT KIT, 7'
LARGE NOZZLE

DRAWN	RPF
DATE	07/03/02
MATERIAL	N/A
BE & BEND ALLOWANCE	N/A
DWG NO.	9278–0270
REV	E
SCALE	N/A
DRAWING SIZE	B
SHEET	1 OF 1

ITEM NO.	PART NO.	UOM	QTY	DESCRIPTION
1	92745	EA	1	HOLDDOWN STRAP, TRACK DUCT
2	927550	EA	1	TRACK DUCT SUPPORT BASE
3	927551	EA	1	TRACK DUCT SPRING BRKT
4	92742	EA	2	SPRING, TRACK DUCT SUPPORT BRKT
5	92743	EA	2	SPRING CLIP, TRCK DUCT SUP.BRKT
6	2831551110	EA	2	1/4-20 X 5/8 HEX BOLT #5 HARD
7	2832-5901	EA	2	1/4-20 CENTERLOCK NUT
8	2833-8110	EA	2	3/8 FLAT WASHER
9	28045	EA	2	LAG BOLT 3/8 X 2.5
10	14042	EA	1	BAG, ZIPLOCK 4 x 6 x .002
11	14045	EA	1	BAG, ZIPLOCK 12 x 15 x .004

SYM.	E.C.O.	BY	REVISION DESCRIPTION	DATE	APPROVED
D		EFK	REDESIGN FOR SPRING MOUNT.	6/21/91	
E		EFK	CHG. P/N 927135 REV.B TO 927135 REV.C	9/25/92	
F		EFK	CHG. P/N 92742 REV.A TO 92742 REV.B	7/8/94	
G		TB	ADD ITEMS 10 THRU 15	5.26.99	
H	01-0019	TB	#92743B WAS 92743A	4.11.01	
J	05-0017	RF	NEW SPLICE SYSTEM	05/18/05	
K	05-0047	RO	SHORTENED 927550-551	10/27/05	

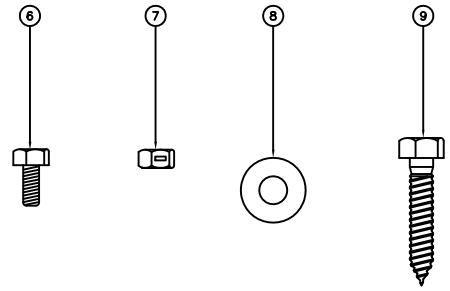

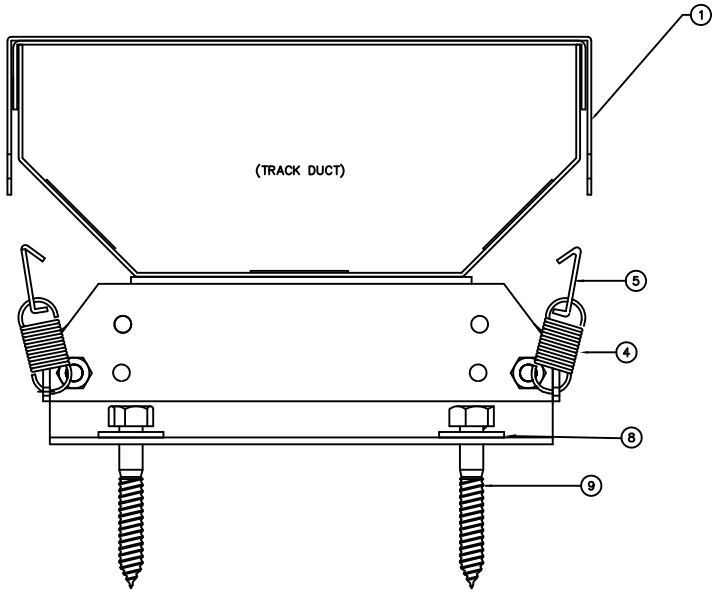

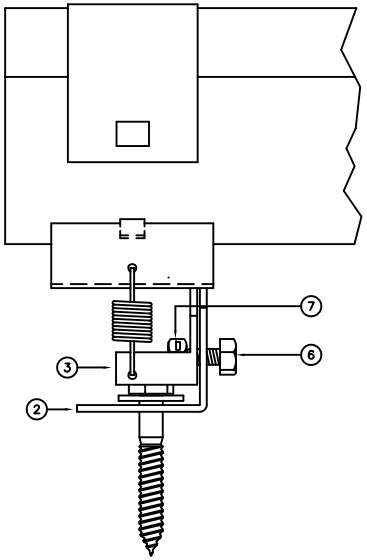

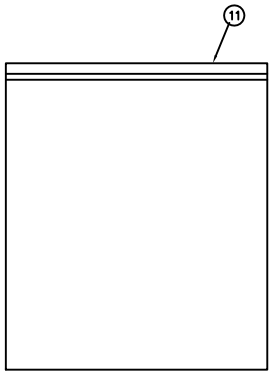

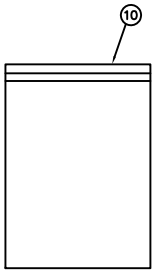

FORMED HOLES
"F" INDICATES FORMED INTO DRAWING
"U" INDICATES FORMED UP FROM DRAWING
REF.SCHEMATIC NO.
REF.CONNECTION DIA.
CAD NO.
MADE FROM

UNLESS OTHERWISE SPECIFIED
ALL BENDS ARE 90°
ALL BENDS HAVE MIN. RADIUS
DIMENSIONS ARE IN INCHES
TOLERANCE ON
FRACTIONS ± 1/32
DECIMALS .XX ±.03 .XXX ±.010 .XXXX ±.005
ANGLES ±1.00°
MATERIAL
FINISH

DRAWN BY EFK
DATE 6/21/91
CHECKED BY
DATE
APPROVED BY
DATE
SHEET 1 OF 1

RAILWAY EQUIPMENT CO.
DELANO, MINNESOTA (763) 972-2500

TITLE
TRACK DUCT
SUPPORT BRKT
SUB-ASSEMBLY

DWG NO. 92774
REV. K

PARTS LIST					
ITEM	PART NUMBER	REV	UOM	QTY	DESCRIPTION
1	21016	-	EA	1	CONNECTOR, HOUSING, 10 POS
2	21017	-	EA	1	STRAIN RELIEF, 10 POS
3	21020	-	EA	1	CONNECTOR, HOUSING, 2 POS
4	21021	-	EA	1	STRAIN RELIEF, 2 POS
5	21023	-	EA	1	STRAIN RELIEF, 3 POS
6	21212	-	EA	1	CONNECTOR, HOUSING, 3 POS 18GA
7	28029	-	EA	1	TERMINAL ASSY, 1 X 12 POS
8	28090	-	EA	1	CAP, TERMINAL POST INSULATING
9	28091	-	EA	1	SHIELD, TERMINAL POST INSULATE
10	2831211106	-	EA	1	SCREW, #6-32 X 3/8 PAN SLT
11	2831311106	-	EA	8	SCREW, #8-32 X 3/8 PAN SLT
12	2831411106	-	EA	9	SCREW, #10-32 X 3/8 PAN SLT
13	2831411110	-	EA	3	SCREW, #10-32 X 5/8 PAN SLT
14	2833-3110	-	EA	1	WASHER, #8 FLAT SAE
15	2833-4310	-	EA	2	WASHER, #10 EXT. STAR
16	45183	-	EA	1	OVERLOAD RELAY, 240V 3HP MOTOR
17	45185	-	EA	1	CONTACTOR, 3 POLE, 115V COIL
18	51204	-	EA	1	BRACKET, GE CIRCUIT BREAKER
19	51205	-	EA	1	CIR BRKR, 50A 240V 2 POLE
20	6031-0103	-	EA	1	LUG, FORK #10 22-18GA NYLON
21	6032-0110	-	EA	11	LUG, RING 1/4 22-18GA NYLON
22	6032-0111	-	EA	3	LUG, RING #10 16-14GA NYLON
23	6032-0112	-	EA	3	LUG, RING 1/4 16-14GA NYLON
24	6034-0102	-	EA	3	LUG, PUSH-ON F .250 22-18GA
25	6090-0102	-	EA	1	CABLE TIE MOUNTS
26	6093-0004	-	IN	18	WIRE DUCT, 1.5IN X 3IN
27	6093-0100	-	EA	32	TY-RAP, 4IN 0.10 WIDTH
28	6093-0303	-	IN	18	WIRE DUCT, COVER 1.5 IN
29	680801	-	IN	56	WIRE, 8GA BLACK
30	681601	-	IN	28	WIRE, 16GA GREEN - HOOK UP
31	681832	-	IN	63	WIRE, 18GA 300V 105C BLACK
32	681833	-	IN	39	WIRE, 18GA THINWALL WHITE 300V
33	681834	-	IN	59	WIRE, 18GA THINWALL RED 300V
34	681835	-	IN	134	WIRE, 18GA THINWALL BROWN 300V
35	681836	-	IN	190	WIRE, 18GA THINWALL BLUE 300V
36	9338-0015	C	EA	1	TRANSFORMER, CONTROL MODULE
37	9338-0320	J	EA	1	CONTROL MODULE, GHAB W/ DISP
38	9338-0325	B	EA	1	SURGE ARRESTOR ASSY, 240V 1PH
39	95075	B	EA	1	PANEL, ELECTRIC HAB
40	9508-0037	A	EA	1	ASSY, CURRENT COIL 100A AC
41	R9330-0021	B	EA	1	LABEL, TERM POST SNO NET

REVISION HISTORY				
REV	ECO #	DESCRIPTION	DATE	BY
A	11-0025	NEW PART	3/4/11	MF
B	11-0014	NEW MODULE	07/07/11	GJ

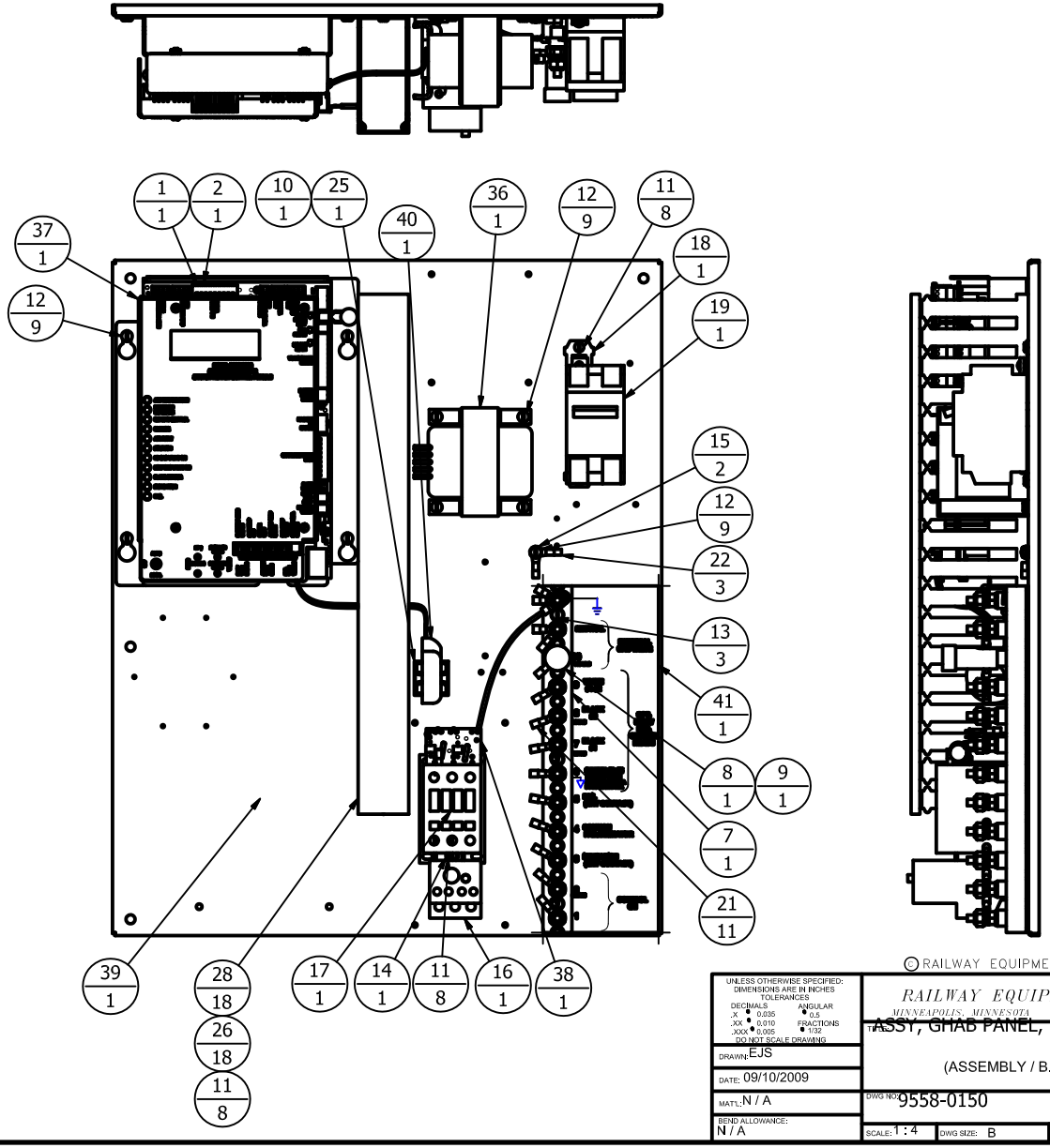

UNLESS OTHERWISE SPECIFIED: DIMENSIONS ARE IN INCHES
TOLERANCES
DECIMALS .X ± 0.035 .XX ± 0.010 .XXX ± 0.005
ANGULAR ± 0.5
FRACTIONS ± 1/32
DO NOT SCALE DRAWING

DRAWN: EJS
DATE: 09/10/2009
MATL: N / A
BEND ALLOWANCE: N / A

RAILWAY EQUIPMENT CO.
MINNEAPOLIS, MINNESOTA (763) 972-2200

TITLE: ASSY, GHAB PANEL, 3HP 230V 1PH

(ASSEMBLY / B. O. M.)

DWG NO: 9558-0150 REV: B

SCALE: 1 : 4 DWG SIZE: B SHEET 1 OF 1

PARTS LIST					
ITEM	PART NUMBER	REV	UOM	QTY	DESCRIPTION
1	14046	-	EA	1	BAG, 9 X 12 4MIL ZIPTOP
2	2100131100	-	EA	1	DRIVE AC 3 HP 230V 3PH INPUT
3	21016	-	EA	1	CONNECTOR, HOUSING, 10 POS
4	21017	-	EA	1	STRAIN RELIEF, 10 POS
5	21020	-	EA	1	CONNECTOR, HOUSING, 2 POS
6	21021	-	EA	1	STRAIN RELIEF, 2 POS
7	21023	-	EA	1	STRAIN RELIEF, 3 POS
8	21212	-	EA	1	CONNECTOR, HOUSING, 3 POS 18GA
9	28029	-	EA	1	TERMINAL ASSY, 1 X 12 POS
10	28090	-	EA	1	CAP, TERMINAL POST INSULATING
11	28091	-	EA	1	SHIELD, TERMINAL POST INSULATE
12	2831211106	-	EA	1	SCREW, #6-32 X 3/8 PAN SLT
13	2831281103	-	EA	2	SCREW, #6-32 X 3/16 FLSTR SLT
14	2831311106	-	EA	7	SCREW, #8-32 X 3/8 PAN SLT
15	2831411106	-	EA	9	SCREW, #10-32 X 3/8 PAN SLT
16	2831411108	-	EA	4	SCREW, #10-32 X 1/2 PAN SLT
17	2831411110	-	EA	3	SCREW, #10-32 X 5/8 PAN SLT
18	2831541132	-	EA	2	SCREW, 1/4-20 X 2 RND SLT
19	2832-5101	-	EA	6	NUT, 1/4-20 HEX
20	2833-2210	-	EA	2	WASHER, #6 SPLIT LOCK
21	2833-3110	-	EA	1	WASHER, #8 FLAT SAE
22	2833-4310	-	EA	2	WASHER, #10 EXT. STAR
23	2833-5110	-	EA	2	WASHER, 1/4 FLAT
24	2833-5211	-	EA	6	WASHER, 1/4 SPLIT LOCK
25	45185	-	EA	1	CONTACTOR, 40 AMP 3POLE, 115V COIL
26	51204	-	EA	1	BRACKET, GE CIRCUIT BREAKER
27	51205	-	EA	1	CIR BRKR, 50A 240V 2POLE
28	5300-0203	-	EA	1	HEATER, STRIP 115V 125W
29	53080	-	EA	1	SENSOR, AIR TEMP
30	60172	-	EA	2	LUG, RING #10 22-18GA HI-TEMP
31	6032-0110	-	EA	12	LUG, RING 1/4 22-18GA NYLON
32	6032-0111	-	EA	4	LUG, RING #10 16-14GA NYLON
33	6032-0112	-	EA	3	LUG, RING 1/4 16-14GA NYLON
34	6034-0102	-	EA	5	LUG, PUSH-ON F .250 22-18GA
35	6034-0103	-	EA	1	LUG, PUSH-ON F .250 16-14GA
36	6090-0102	-	EA	1	CABLE TIE MOUNTS
37	6093-0004	-	IN	1	WIRE DUCT, 1.5IN X 3IN
38	6093-0100	-	EA	25	TY-RAP, 4IN 0.10 WIDTH
39	6093-0303	-	IN	1	WIRE DUCT, COVER 1.5 IN
40	681001	-	EA	1	WIRE, 10GA BLACK 600V 105C
41	681601	-	IN	47.5	WIRE, 16GA GREEN - HOOK UP
42	681803	-	IN	40	WIRE, 18GA BELDEN HIGH TEMP
43	681832	-	IN	61.5	WIRE, 18GA 300V 105C BLACK
44	681833	-	IN	39	WIRE, 18GA THINWALL WHITE 300V
45	681834	-	IN	57	WIRE, 18GA THINWALL RED 300V
46	681835	-	IN	134	WIRE, 18GA THINWALL BROWN 300V
47	681836	-	IN	190	WIRE, 18GA THINWALL BLUE 300V
48	8039-0813	A	EA	1	LABEL, HOT DO NOT TOUCH
49	9220-0029	A	EA	1	COVER, HEAT SHIELD
50	9338-0015	C	EA	1	TRANSFORMER, CONTROL MODULE
51	9338-0320	J	EA	1	CONTROL MODULE, GHAB W/ DISP
52	9338-0325	B	EA	1	SURGE ARRESTOR ASSY, 240V 1PH
53	95075	B	EA	1	PANEL, ELECTRIC HAB
54	9508-0037	A	EA	1	ASSY, CURRENT COIL 100A AC
55	R9330-0021	B	EA	1	LABEL, TERM POST SNO NET

REVISION HISTORY				
REV	ECO #	DESCRIPTION	DATE	BY
A	13-0028	NEW PART	10/2/13	DW

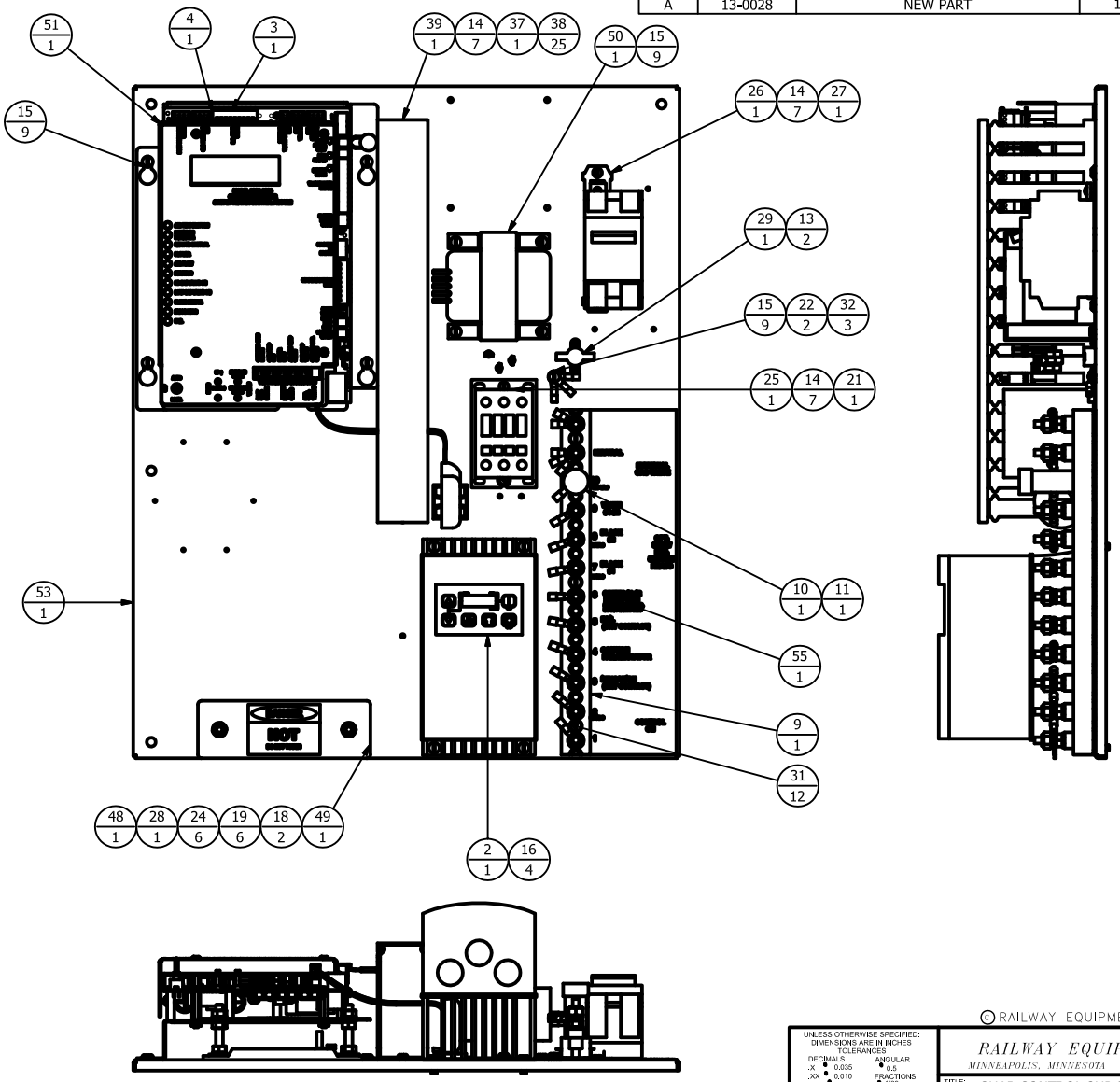

UNLESS OTHERWISE SPECIFIED: DIMENSIONS ARE IN INCHES
TOLERANCES
DECIMALS .X ± 0.035 .XX ± 0.010 .XXX ± 0.005
ANGULAR ± 0.5
FRACTIONS ± 1/32
DO NOT SCALE DRAWING

DRAWN: DW
DATE: 10/02/13
MATL: N / A
BEND ALLOWANCE: N / A

RAILWAY EQUIPMENT CO.
MINNEAPOLIS, MINNESOTA (763) 972-2200

TITLE: GHAB CONTROL 3HP 240V AC DRIVE
(ASSEMBLY / B. O. M.)

DWG NO: 9558-0156
REV: A
SCALE: 1 : 4
DWG SIZE: B
SHEET 1 OF 1

SYM.	E.C.O.	BY	REVISION DESCRIPTION	DATE	APPROVED
	--- ---				
B	---	JB	REVISION B	2/24/09	
C	09-0014	ES	ADDED 208/230VAC	7/7/09	
D	11-0014	GJ	NEW MODULE	07/05/11	

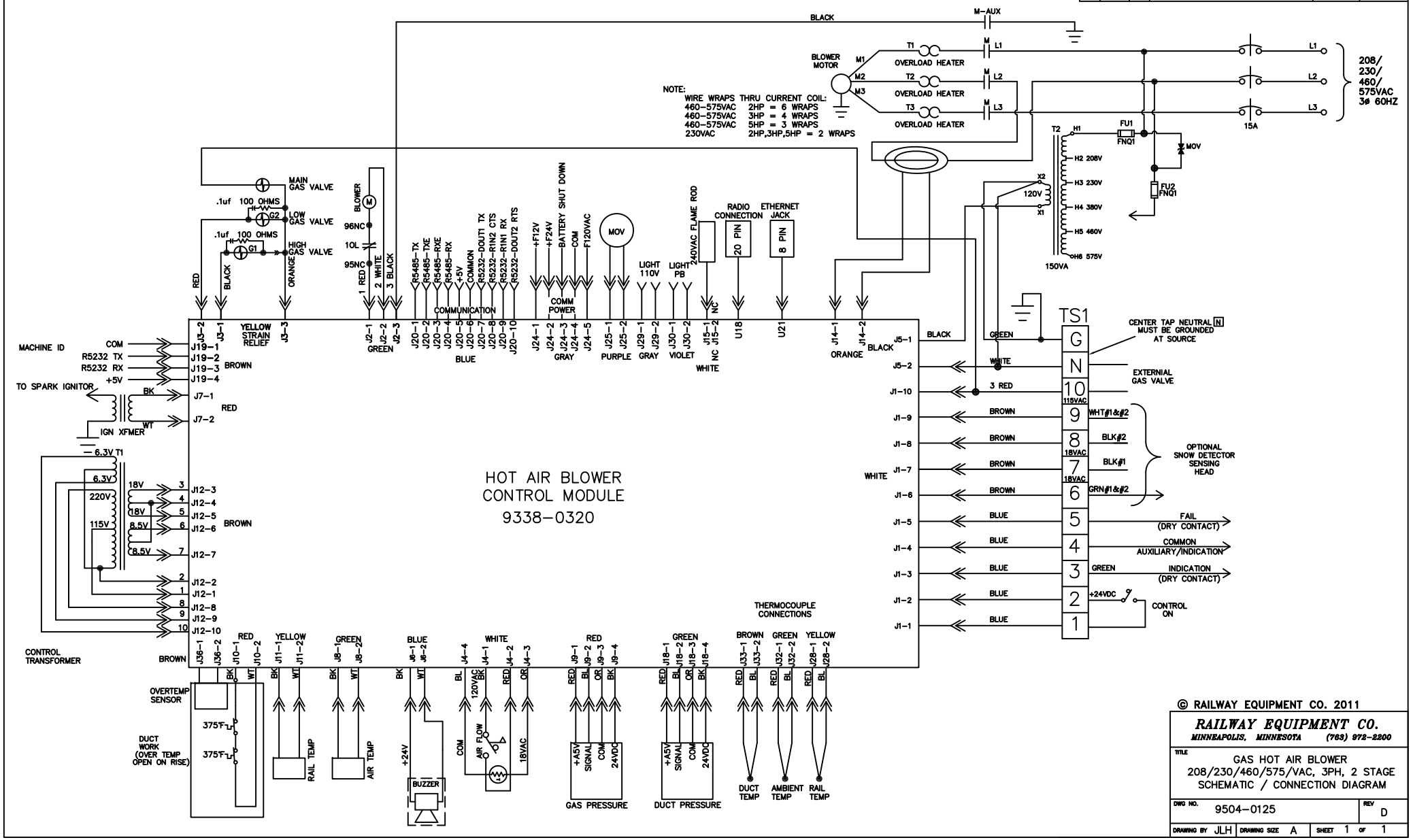

RAILWAY EQUIPMENT CO.
MINNEAPOLIS, MINNESOTA (763) 972-2200

TITLE
GAS HOT AIR BLOWER
208/230/460/575/VAC, 3PH, 2 STAGE
SCHEMATIC / CONNECTION DIAGRAM

DWG NO. 9504-0125 REV D

DRAWING BY JLH DRAWING SIZE A SHEET 1 OF 1

REV.	E.C.O.	REVISION DESCRIPTION	DATE	BY
A		NEW DRAWING	03/07/14	BF

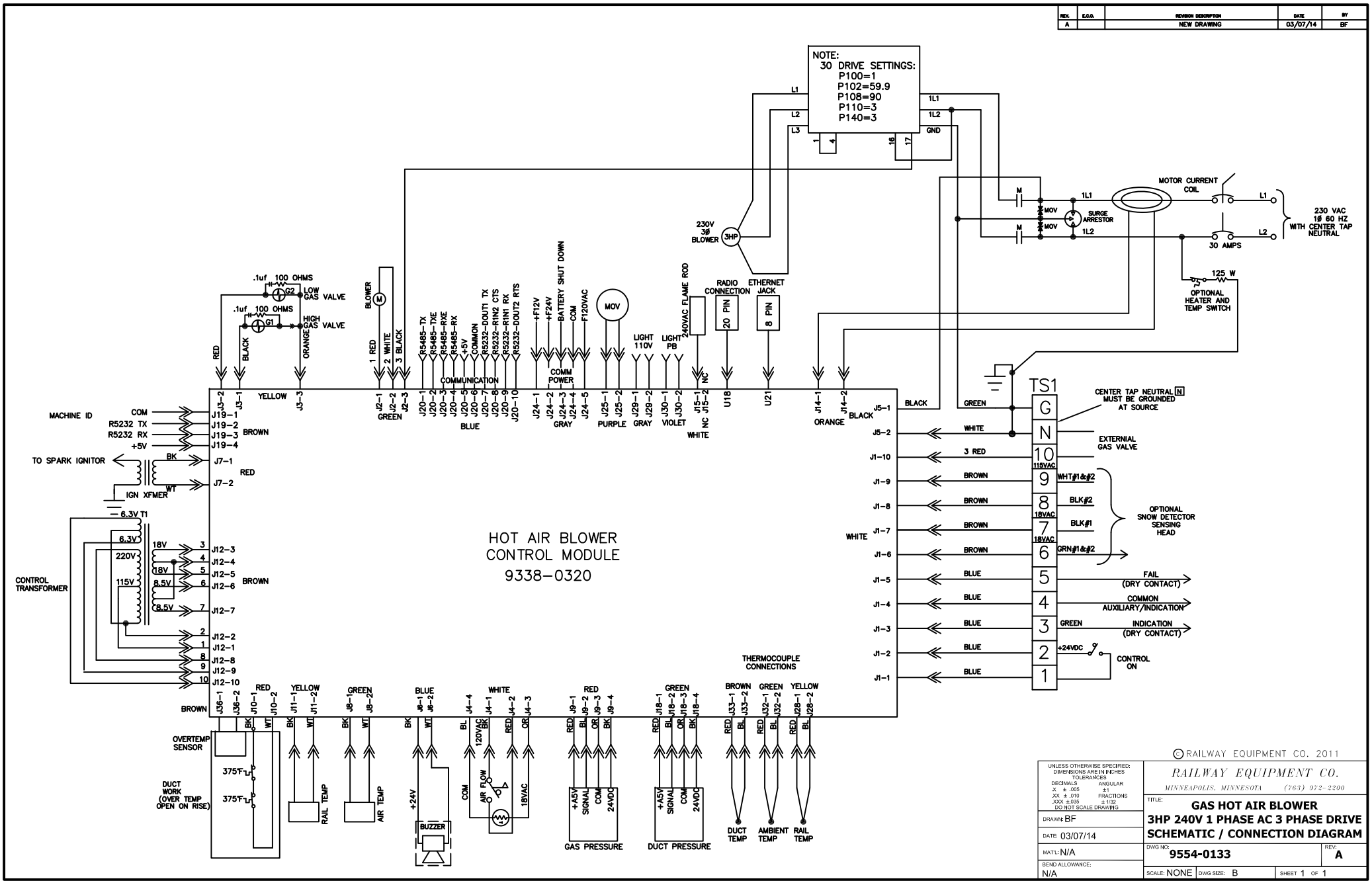

UNLESS OTHERWISE SPECIFIED: DIMENSIONS ARE IN INCHES
TOLERANCES
DECIMALS .X ± .005 .XX ± .010 .XXX ± .035
ANGULAR ± 1°
FRACTIONS ± 1/32
DO NOT SCALE DRAWING

RAILWAY EQUIPMENT CO.
MINNEAPOLIS, MINNESOTA (763) 972-2200

TITLE: **GAS HOT AIR BLOWER 3HP 240V 1 PHASE AC 3 PHASE DRIVE SCHEMATIC / CONNECTION DIAGRAM**

DRAWN: BF
DATE: 03/07/14
MAT'L: N/A
BEND ALLOWANCE: N/A

DWG NO: 9554-0133
REV: A
SCALE: NONE
DWG SIZE: B
SHEET 1 OF 1

SYM.	E.C.O.	BY	REVISION DESCRIPTION	DATE	APPROVED

B	---	JB	REVISION B	2/24/09	
C	---	GJ	NEW MODULE	07/05/11	

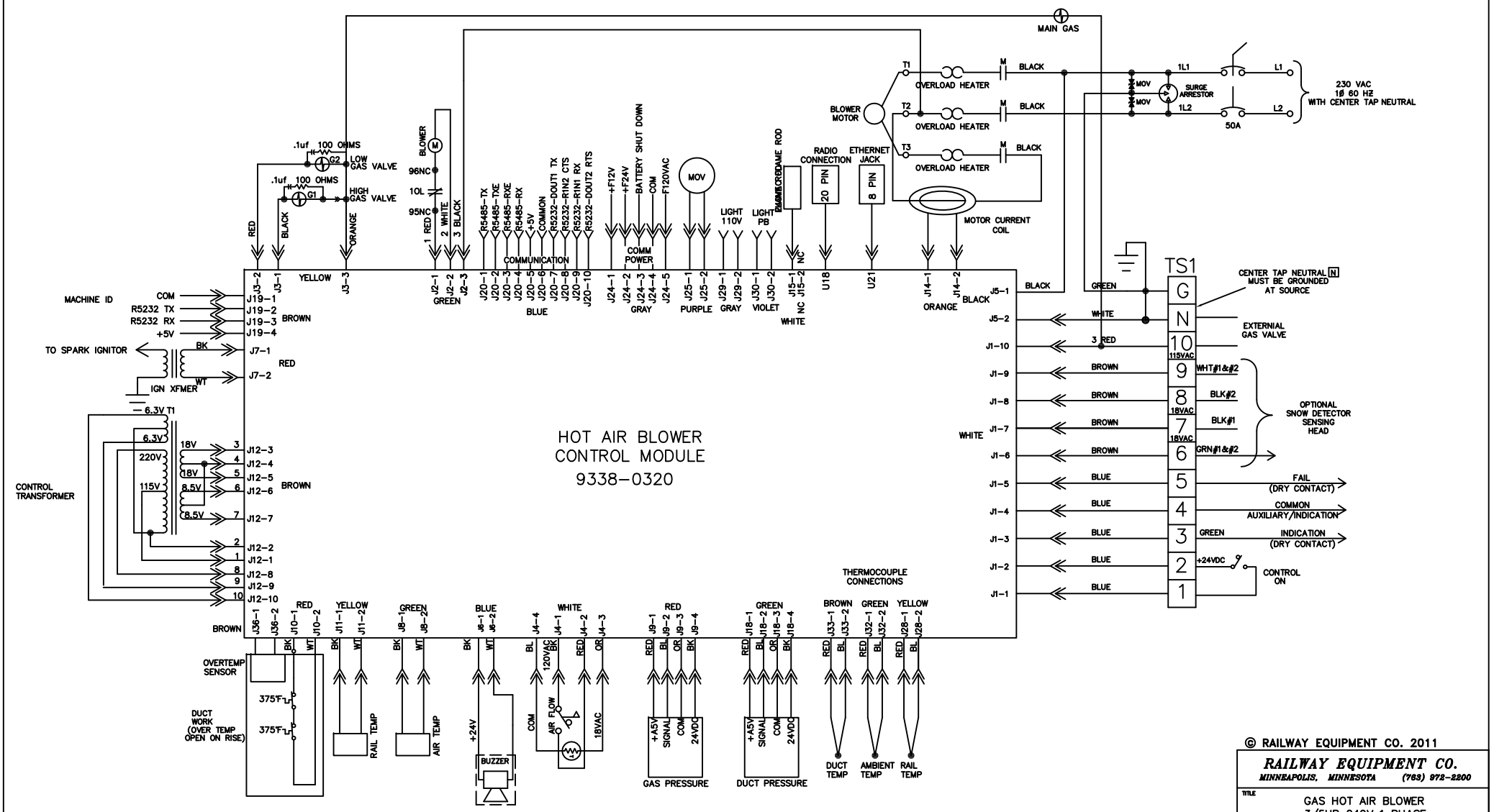

RAILWAY EQUIPMENT CO.
MINNEAPOLIS, MINNESOTA (763) 972-2200

TITLE
GAS HOT AIR BLOWER
3/5HP 240V 1 PHASE
SCHEMATIC / CONNECTION DIAGRAM

DWG NO.	REV
9524-0223	C

DRAWING BY WS | DRAWING SIZE A | SHEET 1 OF 1

PARTS LIST					
ITEM	PART NUMBER	REV	UOM	QTY	DESCRIPTION
1	21023	-	EA	1	STRAIN RELIEF, 3 POS
2	21212	-	EA	1	CONNECTOR, HOUSING, 3POS 18GA
3	2831551134	-	EA	8	BOLT, 1/4-20 X 1-3/4 HEX SS
4	2833-5115	-	EA	8	WASHER, 1/4 FLAT SS
5	2833-5241	-	EA	8	WASHER, 1/4 SPLIT LOCK SS
6	45035	-	EA	1	VALVE, K3A552, 0-3PSI GAS
7	45155	-	EA	2	VALVE, COMBUSTION
8	60002	-	EA	4	3/8 ROMEX
9	60011	-	EA	1	CONNECTOR, CORD 1/2INCH STRT
10	60035	-	EA	2	BUSHING, 1/2 IN PLASTIC INSUL
11	60160	-	EA	1	CONDUIT, LOCK NUT 1/2 IN
12	60197	-	EA	1	FLEX HOSE 3/4 X 18 - 5/8 OD
13	60226	-	EA	1	TEE, 1 X 1 X 3/4 SCH 40
14	60231	-	EA	4	O-RING, BUNA-N, 3/16 WIDE
15	60234	-	EA	1	TEE, 3/4 X 3/4 X 1/4 SCH 40 BLK
16	60241	-	IN	108	CABLE 4 COND. 18GA
17	6032-0110	-	EA	1	LUG, RING 1/4 22-18GA NYLON
18	6092-0201	-	EA	9	LUG, WIRE JOINT NYLON
19	61012	-	EA	2	NIPPLE, 3/4 X 2 SCH 40 BLACK
20	61013	-	EA	1	NIPPLE, 3/4 X 3 SCH 40 BLACK
21	61025	-	EA	3	NIPPLE, 1 X 2 IN SCH 40 BLACK
22	61028	-	EA	1	UNION, 1 IN SCH 40 BLACK
23	61032	-	EA	1	NIPPLE, 1 X 3 IN SCH 40 BLACK
24	61060	-	EA	1	NIPPLE, 1 X 8 IN SCH 40 BLACK
25	681820	A	FT	1.5	CORD, STRAIGHT 18/2 SJTOW
26	933612	D	EA	1	COUPLING PLATE 3/4 NPT
27	9338-0043	B	EA	3	SNUBBER ASSEMBLY, GAS VALVE
28	9338-0070	A	EA	1	ASSY, GAS PRESSURE SENSOR
29	953611	A	EA	1	OUTLET MANIFOLD, GASLINE 3/5HP
30	953612	A	EA	1	COUPLING PLATE 1 INCH NPT
31	955290	C	EA	1	UNIVERSAL ORIFICE PLATE 3HP

GAS VALVE WIRING DIAGRAM

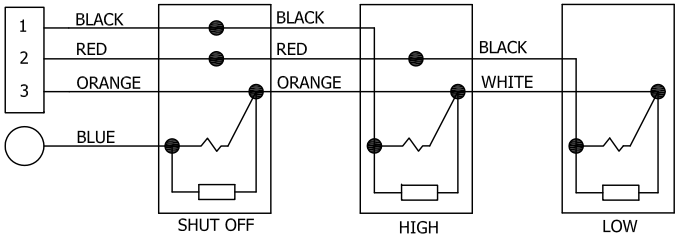

REVISION HISTORY				
REV	ECO	DESCRIPTION	DATE	BY
A	11-0025	NEW ASSEMBLY	03/04/11	MF

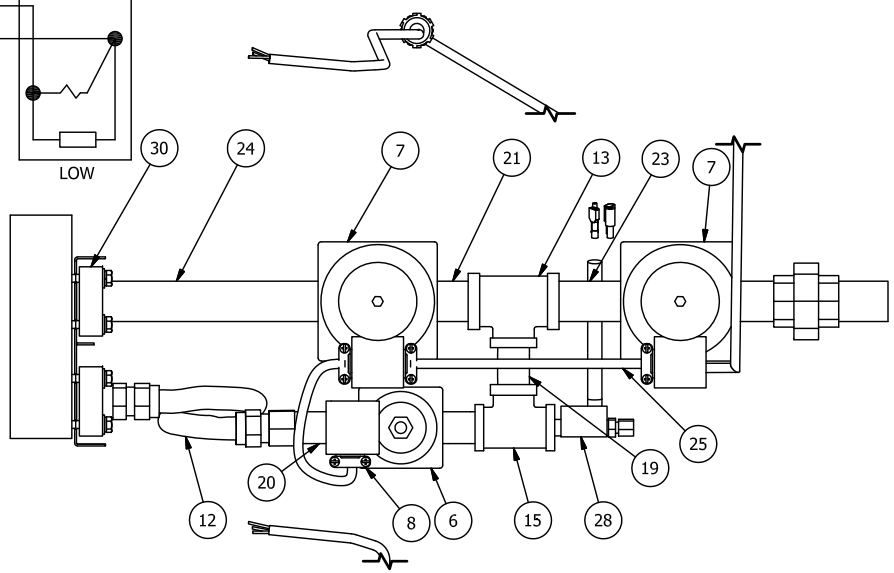

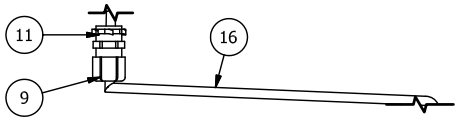

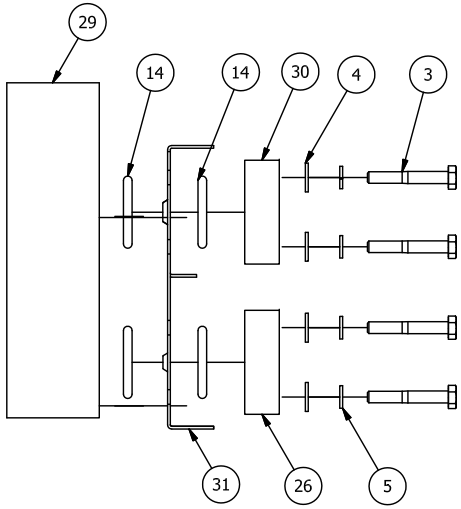

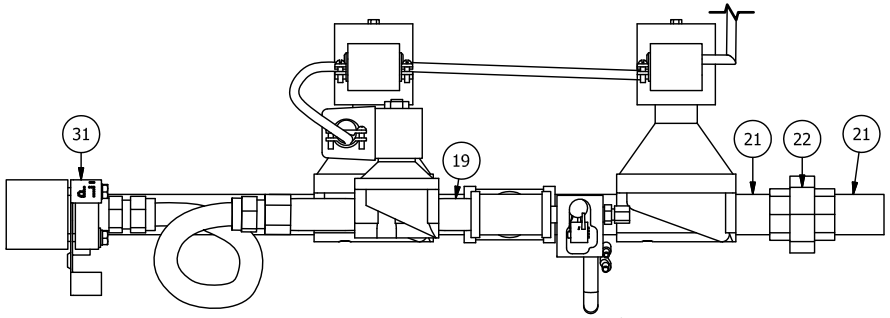

NOTE:

1. USE LOCTITE 401 SEALANT TO INSTALL THE FOUR O-RINGS INTO THE OUTLET MANIFOLD AND THE COUPLING PLATES. DO NOT USE LOCKTITE BETWEEN THE ORINGS AND THE ORIFICE PLATE.
2. WATCH THE GAS FLOW DIRECTION WHEN INSTALLING THE GAS VALVES.

UNLESS OTHERWISE SPECIFIED: DIMENSIONS ARE IN INCHES
TOLERANCES
DECIMALS .X ± 0.1 .XX ± 0.02 .XXX ± 0.01
ANGULAR ± 1°
FRACTIONS ± 1/32
DO NOT SCALE DRAWING

RAILWAY EQUIPMENT CO.
MINNEAPOLIS, MINNESOTA (763) 972-2200

TITLE: ASSY, GHAB PIPING 3HP BUNGALOW

ASSY/BOM

DRAWN: RMJ
DATE: 11/17/06
MATL: N/A
BEND ALLOWANCE: N/A
DWG NO: 9658-0138
REV: A
SCALE: 1/4
DWG SIZE: B
SHEET 1 OF 1

ITEM NO.	PART NO.	UOM	QTY	DESCRIPTION
1	952140	EA	1	BURNER, 12 INCH WELDED
2	53070	EA	1	FLAME ROD, REF AUBURN #FRS-4-7½
3	56071	EA	1	SPARK IGNITOR, REF AUBURN #I-31-I
4	2831851112	EA	4	BOLT, 3/8-16 X 3/4
5	2832-8904	EA	4	NUT, 3/8-16 CENTER LOCK
6	952103	EA	1	SUPPORT BRACKET 12 INCH BURNER
7	681402	FT	3.5	WIRE, 14GA HIGH TEMP
8	6033-0100	EA	1	LUG, RING #10 16-14GA HI-TEMP
9	6032-0112	EA	1	LUG, RING 1/4 16-14GA NYLON
10	2831411408	EA	1	SCREW, #10-32 X 1/2 PAN SLT SS
11	2832-4201	EA	1	NUT, #10-32 HEX SS
12	2833-4310	EA	2	WASHER, #10 EXT. STAR
13	61028	EA	1	UNION, 1 IN SCH 40 BLACK
14	61026	EA	1	NIPPLE, 1 X 4 IN SCH 40 BLACK

SYM.	E.C.O.	BY	REVISION DESCRIPTION	DATE	APPROVED
B	02-0004	RF	NEW BURNER	07/20/04	---
–	–	RJ	ADDED WIRE, NIPPLE & UNION	07/20/04	---

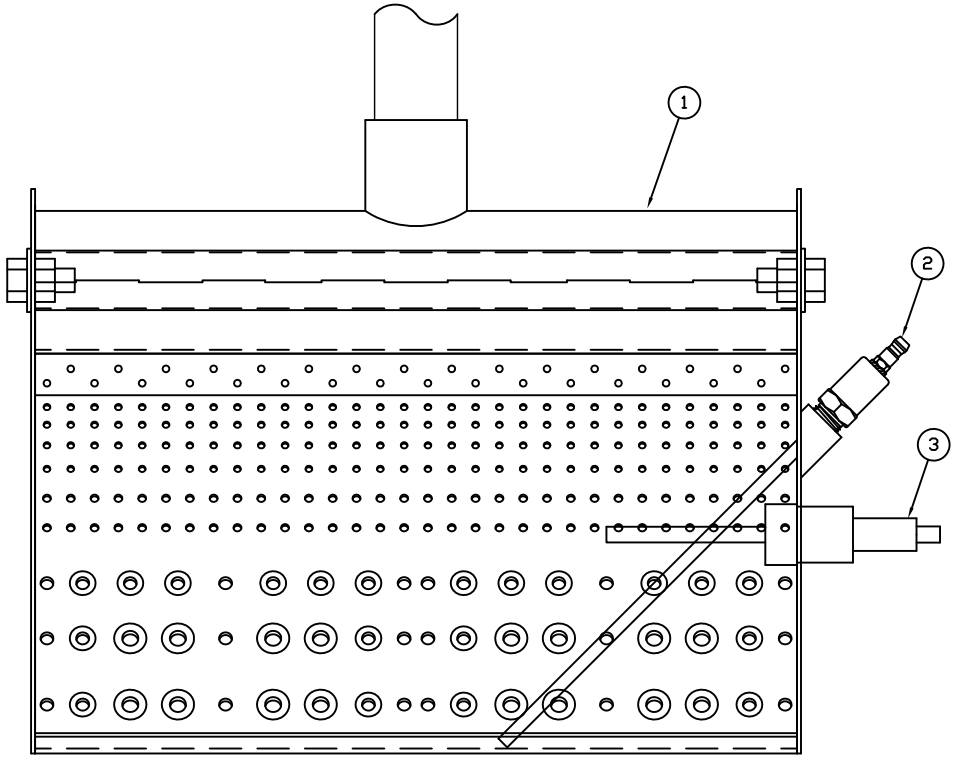

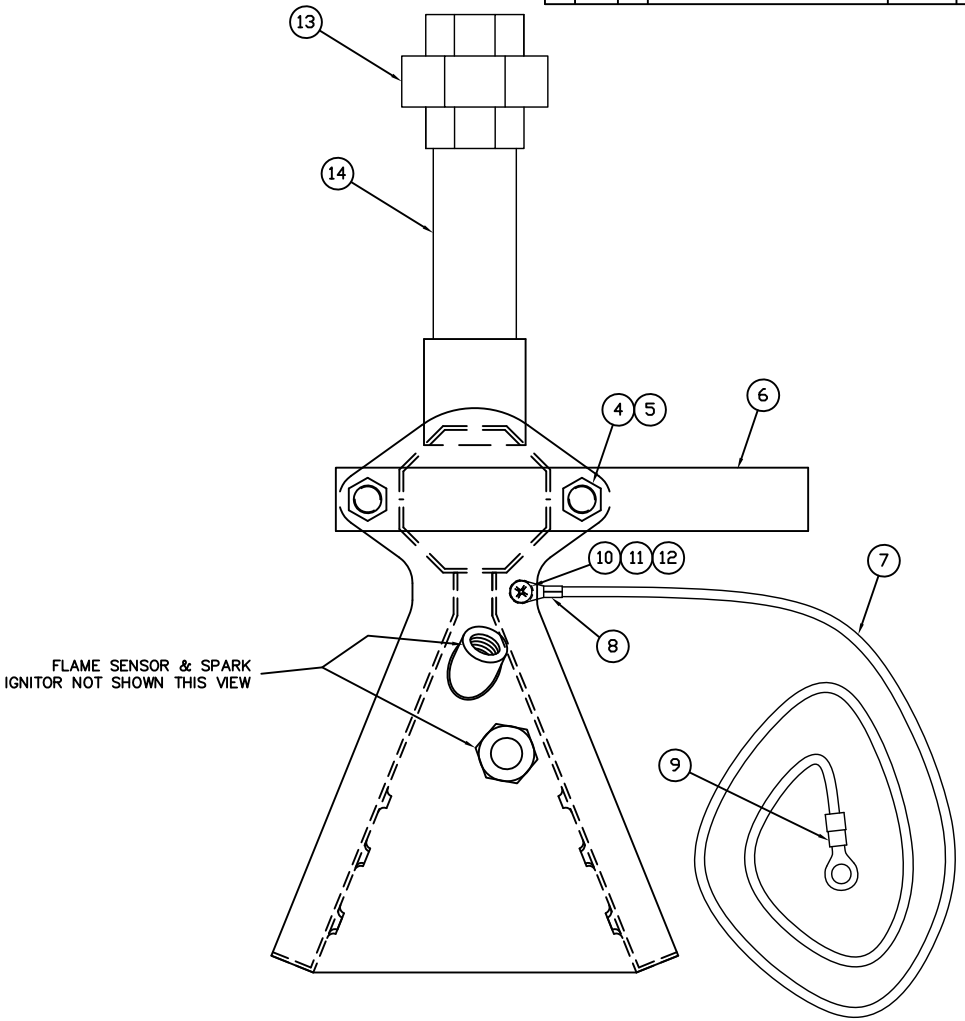

UNLESS OTHERWISE SPECIFIED:
DIMENSIONS ARE IN INCHES
TOLERANCES
DECIMALS .X ± .035 .XX ± .010 .XXX ± .005
ANGULAR ± 0.5°
FRACTIONS ± 1/32
DO NOT SCALE DRAWING

DRAWN RPF

DATE 12/23/03

MATERIAL N/A

DIE & BEND ALLOWANCE N/A

RAILWAY EQUIPMENT CO.
DELANO, MINNESOTA (763) 972-2200

TITLE
BURNER
12 INCH STAINLESS
(ASSEMBLY / B.O.M.)

DWG NO. 9528-0135

REV B

SCALE 1/2 DRAWING SIZE B SHEET 1 OF 1